CAME

CAME.COM

FA02010-EN

Control panel for 230 V gearmotors

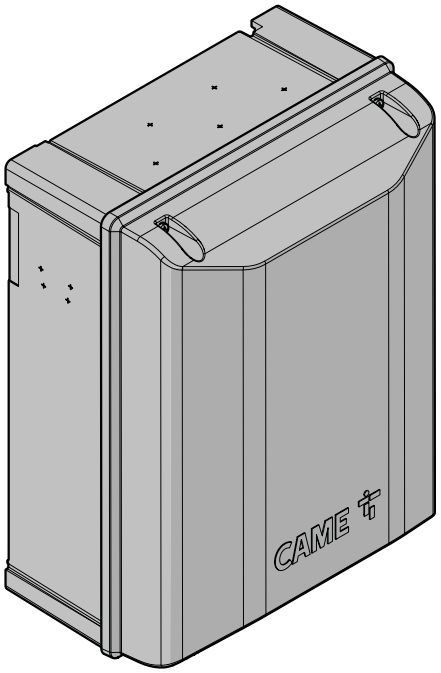

ZLX230M

INSTALLATION MANUAL

EN English

TABLE OF CONTENTS

GENERAL PRECAUTIONS FOR INSTALLERS 4

DISMANTLING AND DISPOSAL 5

PRODUCT DATA AND INFORMATION 5

Key 5
Description 5
Intended use 5
Technical data 6
Fuse table 6
Description of parts 7
Control panel 8
Optional accessories 9
Size 9
Cable types and minimum thicknesses 10

INSTALLATION 11

Fastening the control panel 11
DIN rail 11
Wall-mounted 12

ELECTRICAL CONNECTIONS 13

Passing the electrical cables 13
Fixing earth cable 13
Electronic board fastening and support 14
Mains connections 14
Power supply 230 V AC - 50/60 Hz 14
Connecting gearmotors for swing operators 15
Gearmotors without encoder 15
Gearmotor with encoder 15
Gearmotors with limit switch 16
Capacitor connection 16
Connecting accessories 17
Power supply output for accessories 24 V 17
Power supply output for accessories 230 V 17
CXN BUS connection 17
Command and control devices 18
Signalling devices 18
Safety devices 19
DIR photocells 19
DXR / DLX photocells 19
DFWN sensitive edge 20
Electric lock or electromagnet 20
Connecting accessories with BUS CXN system 21
Cabling 21
Cable types and minimum thicknesses 21
Maximum number of devices that can be connected, by type 21
BUS CXN device consumption 21

PROGRAMMING 22

Programming button functions and warning LEDs 22
Getting started 23
Gearmotor without encoder 23
Gear motor with encoder 23
Diagrams showing leaf speed and slowdown (only for motors without an encoder or with an inactive encoder) 24
Diagrams showing leaf speed, slowdown and approach points 25

Graph showing speed curves during movement, slowdown and approach. 25
Functions menu 26
BUS (b1-b8) photocell functions 35
I/O BUS 1 (b11) module / I/O BUS 2 (b12) module functions* 36
BUS (b21-b28) key selector switch functions 37
BUS (b40) flashing beacon functions 37
Saving a new user 39
Removing registered users 40
Forgotten password 40
Factory reset 40
DISPLAY WARNINGS KEY 41
Error messages 42
SHORT CIRCUIT CHECK PROCEDURE 42
FINAL OPERATIONS 42

GENERAL PRECAUTIONS FOR INSTALLERS

⚠ Important safety instructions.

⚠ Please follow all of these instructions. Improper installation may cause serious bodily harm.

⚠ Before continuing, please also read the general precautions for users.

Only use this product for its intended purpose. Any other use is hazardous. • The manufacturer cannot be held liable for any damage caused by improper, unreasonable or erroneous use. • This product has been designed to be assembled to partly completed machinery and/or equipment so as to build machinery as regulated by the Machinery Directive 2006/42/EC. • The final installation must comply with the Machinery Directive (2006/42/EC) and the European reference standards in force. • The manufacturer declines any liability for using non-original products, which would also void the warranty. • All operations indicated in this manual must be carried out exclusively by skilled and qualified personnel and in full compliance with the regulations in force. • The device must be installed, wired, connected and tested according to good professional practice, in compliance with the standards and laws in force. • Make sure the mains power supply is disconnected during all installation procedures. • All the components (e.g. actuators, photocells and sensitive edges) needed for the final installation to comply with the Machinery Directive (2006/42/EC) and with the reference harmonised technical standards are specified in the general CAME product catalogue or on the website www.came.com. • Check that the temperature ranges given are suitable for the installation site. • Make sure that no direct jets of water can wet the product at the installation site (sprinklers, water cleaners, etc.). • Make sure you have set up a suitable dual-pole cut-off device along the power supply that is compliant with the installation rules. It should completely cut off the power supply according to category III surcharge conditions. • Demarcate the entire site properly to prevent unauthorised personnel from entering, especially minors. • Use suitable protection to prevent any mechanical hazards due to persons loitering within the operating range of the operator. • The electrical cables must pass through special pipes, ducts and cable glands in order to guarantee adequate protection against mechanical damage. • The electrical cables must not touch any parts that may overheat during use (such as the motor and transformer). • Before installation, check that the guided part is in good mechanical condition, and that it opens and closes correctly. • The product cannot be used to automate any guided part that includes a pedestrian gate, unless it can only be enabled when the pedestrian gate is secured. • Make sure that nobody can become trapped between the guided and fixed parts, when the guided part is set in motion. If you are automating a pedestrian gate that moves horizontally, this can be achieved if the corresponding distance is less than 8 mm. However, the distances indicated below are sufficient to avoid trapping the corresponding body parts:

- fingers, more than 25 mm;
- feet, more than 50 mm;
- head, more than 300 mm;
- for the entire body, more than 500 mm.

If you cannot achieve these distances, you will need to take suitable safety precautions. • All fixed controls must be clearly visible after installation, in a position that allows the guided part to be directly visible, but far away from moving parts. In the case of a hold-to-run control, this must be installed at a minimum height of 1.5 m from the ground and must not be accessible to the public. • Where operated with a hold-to-run control, install a STOP button to disconnect the main power supply to the operator, to block movement of the guided part. • If not already present, apply a permanent tag that describes how to use the manual release mechanism close to it. • Make sure that the operator has been properly adjusted and that the safety and protection devices and the manual release are working properly. • Before handing over to the final user, check that the system complies with the harmonised standards and the essential requirements of the Machinery Directive (2006/42/EC). • Any residual risks must be indicated clearly with proper signage affixed in visible areas, and explained to end users. • Put the machine's ID plate in a visible place when the installation is complete. • If the power-supply cable is damaged, it must be immediately replaced by the manufacturer or by an authorised technical assistance centre, or in any case, by qualified staff, to prevent any risk. • Keep this manual inside the technical folder along with the manuals of all the other devices used for your automation system. • Make sure to hand over to the end user all the operating manuals of the products that make up the final machinery. • The product, in its original packaging supplied by the manufacturer, must only be transported in a closed environment (railway carriage, containers, closed vehicles). • If the product malfunctions, stop using it and contact customer services at https://www.came.com/global/en/contact-us or via the telephone number on the website. • The manufacture date is provided in the production batch printed on the product label. If necessary, contact us at https://www.came.com/global/en/contact-us. • The general conditions of sale are given in the official CAME price lists.

DISMANTLING AND DISPOSAL

☛ CAME S.p.A. employs an Environmental Management System at its premises. This system is certified and compliant with the UNI EN ISO 14001 standard to ensure that the environment is respected and safeguarded. Please continue safeguarding the environment. At CAME we consider it one of the fundamentals of our operating and market strategies. Simply follow these brief disposal guidelines:

⚽ DISPOSING OF THE PACKAGING

The packaging materials (cardboard, plastic, etc.) can be disposed of easily as solid urban waste, separated for recycling.
Before dismantling and disposing of the product, please always check the local laws in force.

DISPOSE OF THE PRODUCT RESPONSIBLY

⚽ DISPOSING OF THE PRODUCT

Our products are made of various materials. Most of these materials (aluminium, plastic, iron and electrical cables) are classified as solid urban waste. They can be separated for recycling and disposed of at authorised waste treatment plants.
Other components (electronic boards, transmitter batteries, etc.) may contain pollutants.
These must be removed and disposed of by an authorised waste disposal and recycling firm.
It is always advisable to check the specific laws that apply in your area.

DISPOSE OF THE PRODUCT RESPONSIBLY

PRODUCT DATA AND INFORMATION

Key

📖 This symbol shows which parts to read carefully.

⚠ This symbol shows which parts describe safety issues.

☛ This symbol shows what to tell users.

The measurements, unless otherwise stated, are in millimetres.

Description

ZLX230M - 801QA-0120

Multifunction control panel, with 230 V AC power supply, for 230 V two-leaf gates, with programming and signalling display, self-diagnosis of safety devices, Digital Torque Control, CXN BUS, 2 safety inputs and storage for up to 250 users.

Intended use

The product complies with Regulation (EU) 2023/826 regarding ecodesign requirements for energy consumption in standby and off mode for household and office equipment.

Technical data

MODELS	ZLX230M
Power supply (V - 50/60 Hz)	220 AC to 240 AC
Motor power supply (V)	220 AC to 240 AC
Standby consumption (W)	0,5
Power (W)	1100
Motor power (W)	950
Colour	RAL 7040
Operating temperature (°C)	-20 ÷ +55
Storage temperature (°C)*	-25 ÷ +70
Encoder	YES
Protection rating (IP)	54
Insulation class	I
Average life (cycles)**	100.000

(*) Before installing the product, keep it at room temperature where it has previously been stored or transported at a very high or very low temperature.

(**) The average product life is a purely indicative estimate. It applies to compliant usage, installation and maintenance conditions. It is also influenced by other factors, such as climatic and environmental conditions (where present, see the MCBF table).

Fuse table

MODELS	ZLX230M
Line fuse	5 A F

⚠ The accessories fuse is not on this board. See the [Short circuit check procedure] section for more information.

Description of parts

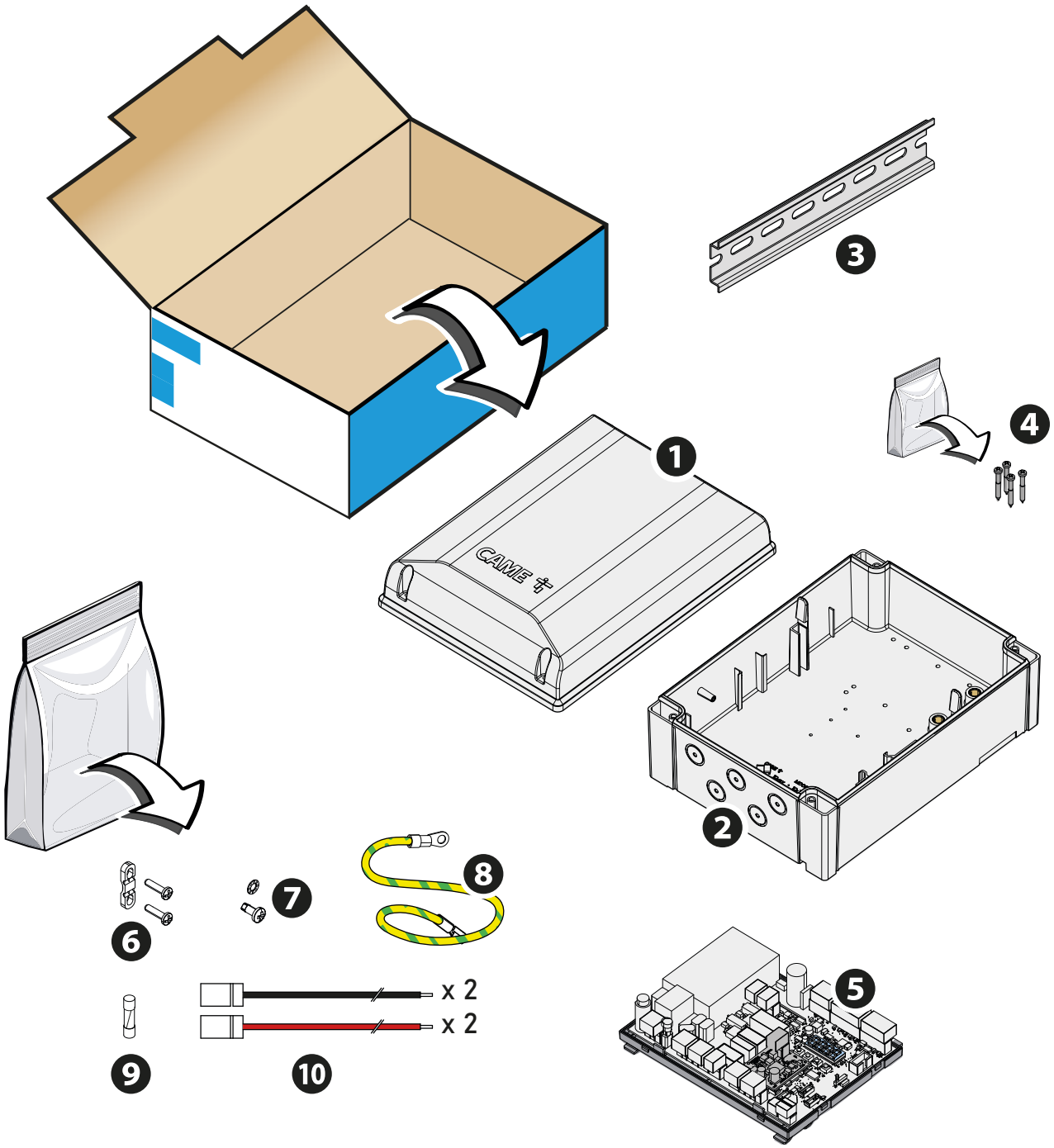

❶ Control panel cover
❷ Control panel back
❸ DIN rail
❹ Cover fastening screws
❺ Control board with card slot
❻ Cable clamp and fixing screws (3.9X19 UNI6954)
❼ Knurled washer (M4 UNI8842A) and fixing screw (M4X10) for earth star centre.
❽ Functional earth cable
❾ Line fuse
❿ Breakaway capacitor connection cables

Control panel

❶ Capacitor housing
❷ Accessory power supply terminal board and connecting warning devices
❸ Terminal board for connecting control devices
❹ Terminal board for connecting the safety devices
❺ Display
❻ Connector for CAME KEY
❼ RSE card connector
❽ RIO CONN card connector
❾ Connector for plug-in radio frequency card (AF)
❿ Terminal board for CRP connection
⓫ Terminal board for connecting the antenna
⓬ Terminal boards for connecting the capacitors
⓭ Programming buttons
⓮ Terminal board for CXN BUS accessories
⓯ Flashing beacon terminal board
⓰ Terminal boards for connecting the gearmotors
⓱ Line fuse
⓲ Power supply terminal board
⓳ Terminal board for connecting micro limit switches or encoders
⓴ Earthing star point

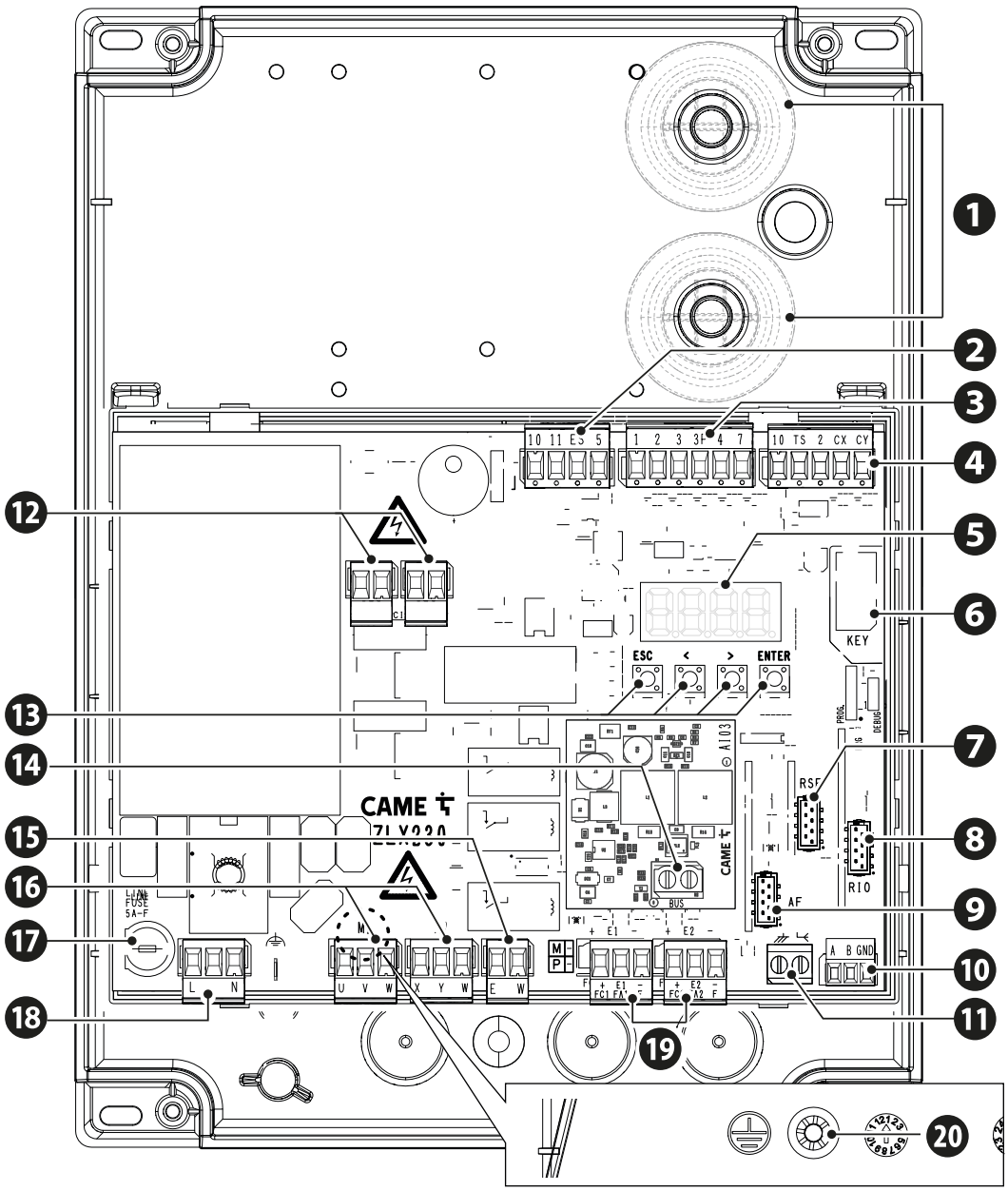

Optional accessories

㉖ RGSM001 module (806SA-0010)

㉗ SMA module (009SMA)

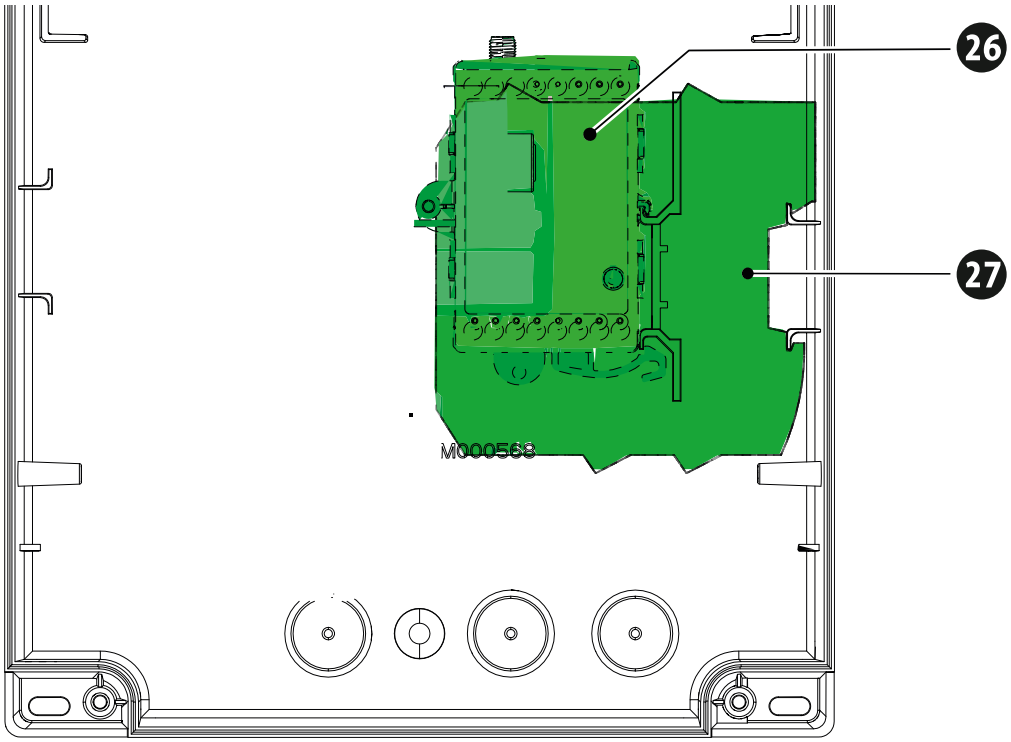

Size

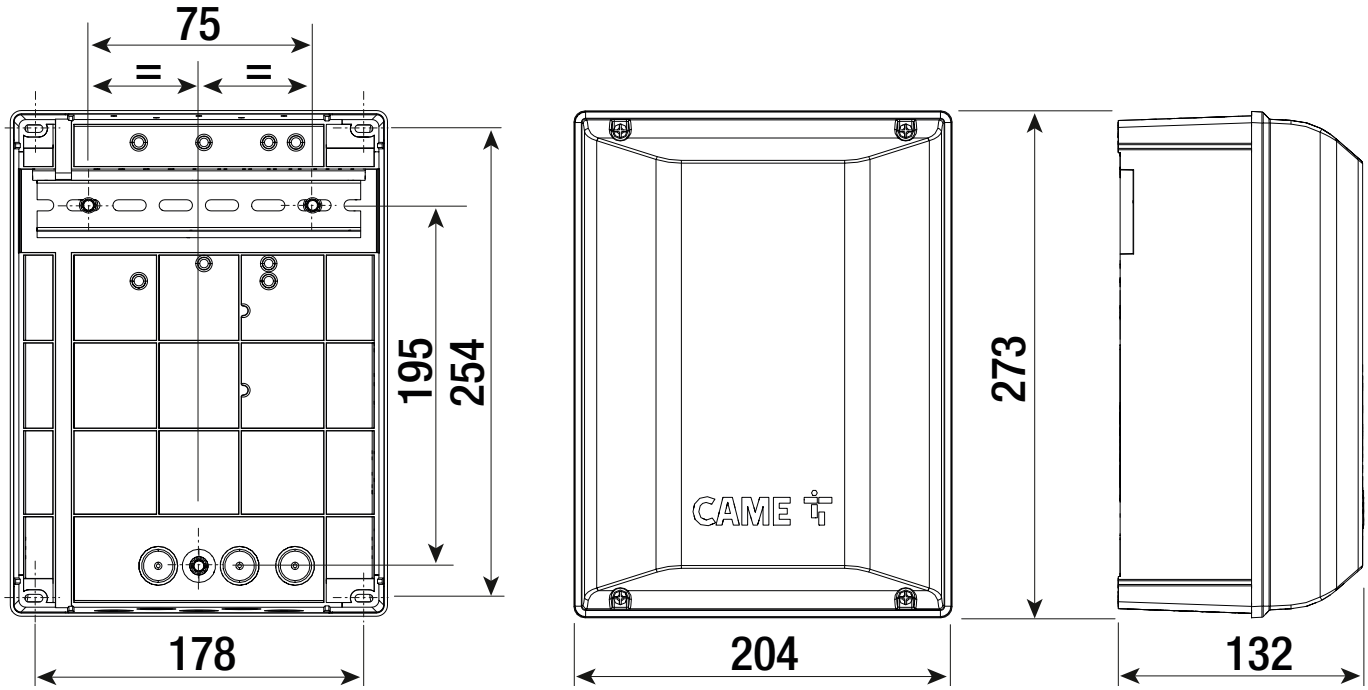

Cable types and minimum thicknesses

Cable length (m)	up to 20	from 20 to 30
Power supply 230 V AC	3G x 1.5 mm^2	3G x 2.5 mm^2
Flashing beacon 230 V AC	2 x 1 mm^2	2 x 1 mm^2
TX Photocells	2 x 0.5 mm^2	2 x 0.5 mm^2
RX photocells	4 x 0.5 mm^2	4 x 0.5 mm^2
Electric lock or electromagnet	2 x 1 mm^2	2 x 1.5 mm^2
Command and control devices	*no. x 0.5 mm^2	*no. x 0.5 mm^2

* no. = see product assembly instructions

Warning: the cable cross-section is indicative and varies according to the motor power and cable length.

🕮 When operating at 230 V and outdoors, use H05RN-F cables that are IEC 60245 (IEC 57) compliant; when indoors, use H05VV-F cables that are IEC 60227 (IEC 53) compliant; For power supplies up to 48 V, use FROR 20-22 II cables compliant with standard EN 50267-2-1 (CEI).

🕮 To connect the antenna, use RG58 cable (up to 5 m).

🕮 To connect to the CRP, use a UTP CAT5 cable (up to 1,000 m long).

🕮 If the cable lengths differ from those specified in the table, define the cable cross-sections according to the actual power draw of the connected devices and in line with regulation CEI EN 60204-1.

🕮 For multiple, sequential loads along the same line, recalculate the values in the table according to the actual power draw and distances. For information on connecting products not covered in this manual, please see the documentation accompanying the products themselves.

🕮 To connect the encoder, use a FRORPU 3 x 0.5 mm^2 cable or a cable supplied by CAME on request (item code 801XA-0020).

Fastening the control panel

DIN rail

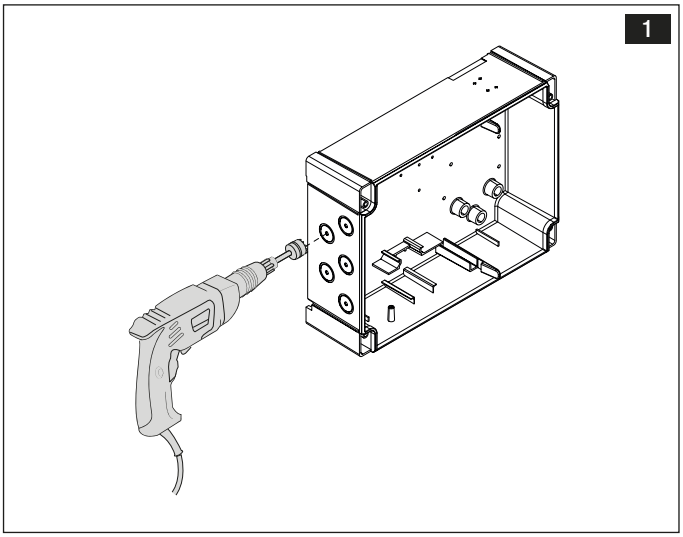

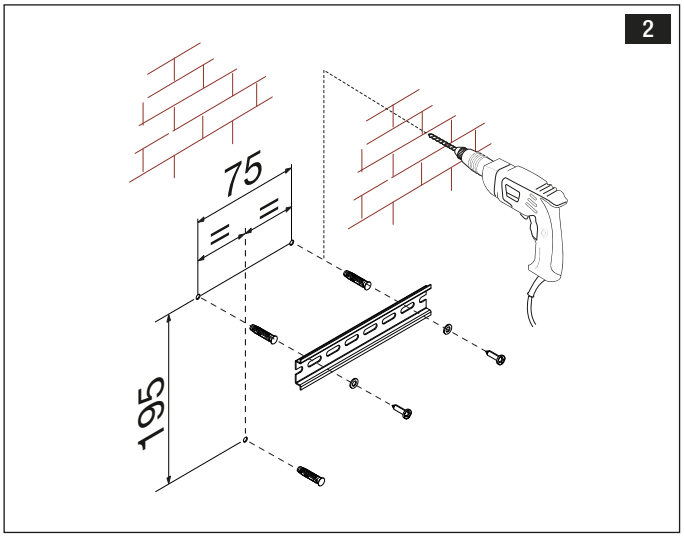

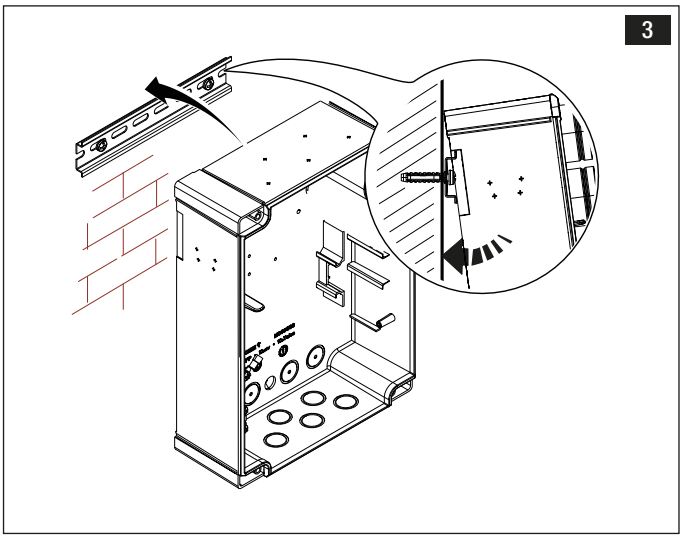

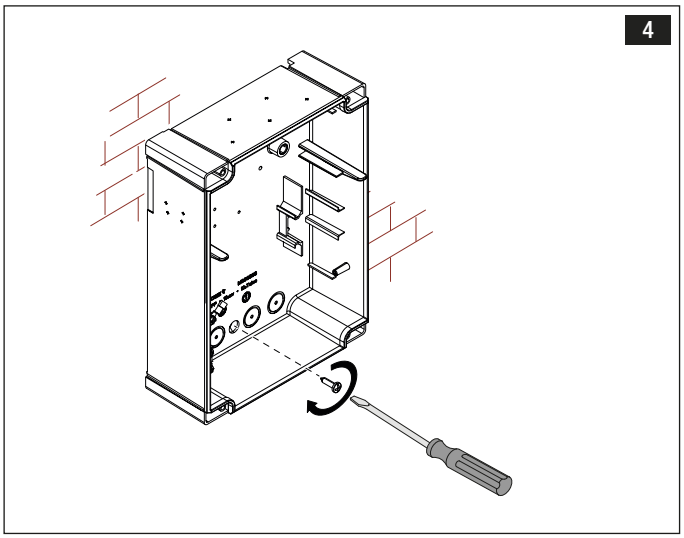

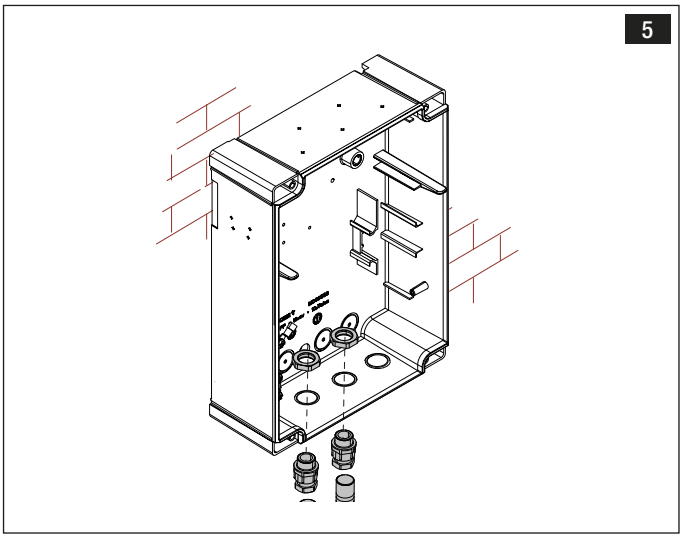

Wall-mounted

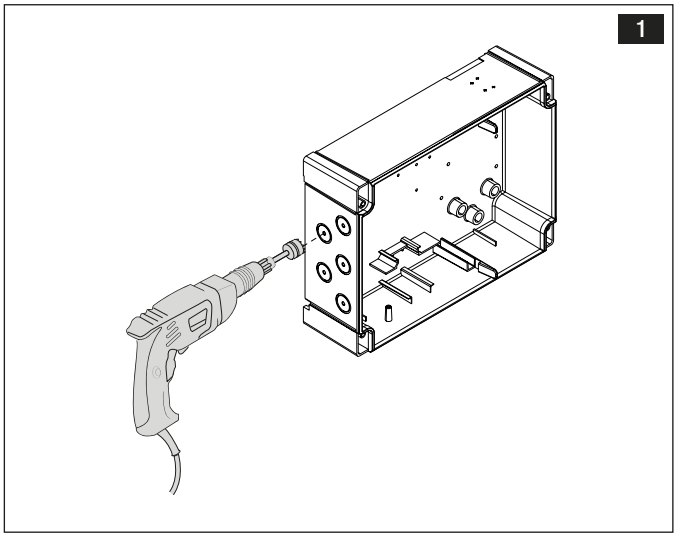

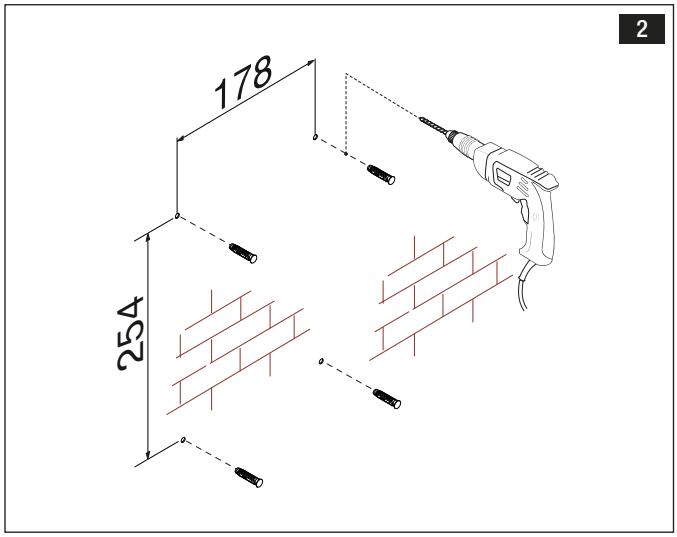

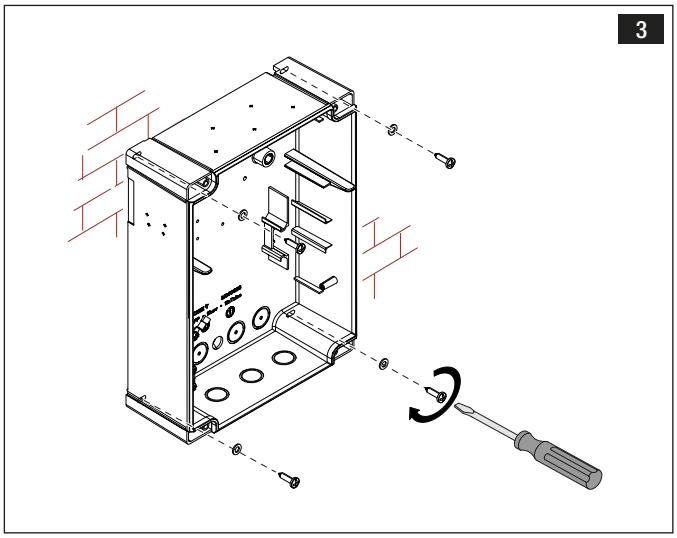

Passing the electrical cables

📖 Connect all wires and cables in compliance with the law.

📖 Use cable glands with corrugated tubing to connect the devices to the control panel. One of these must be for the power cable only.

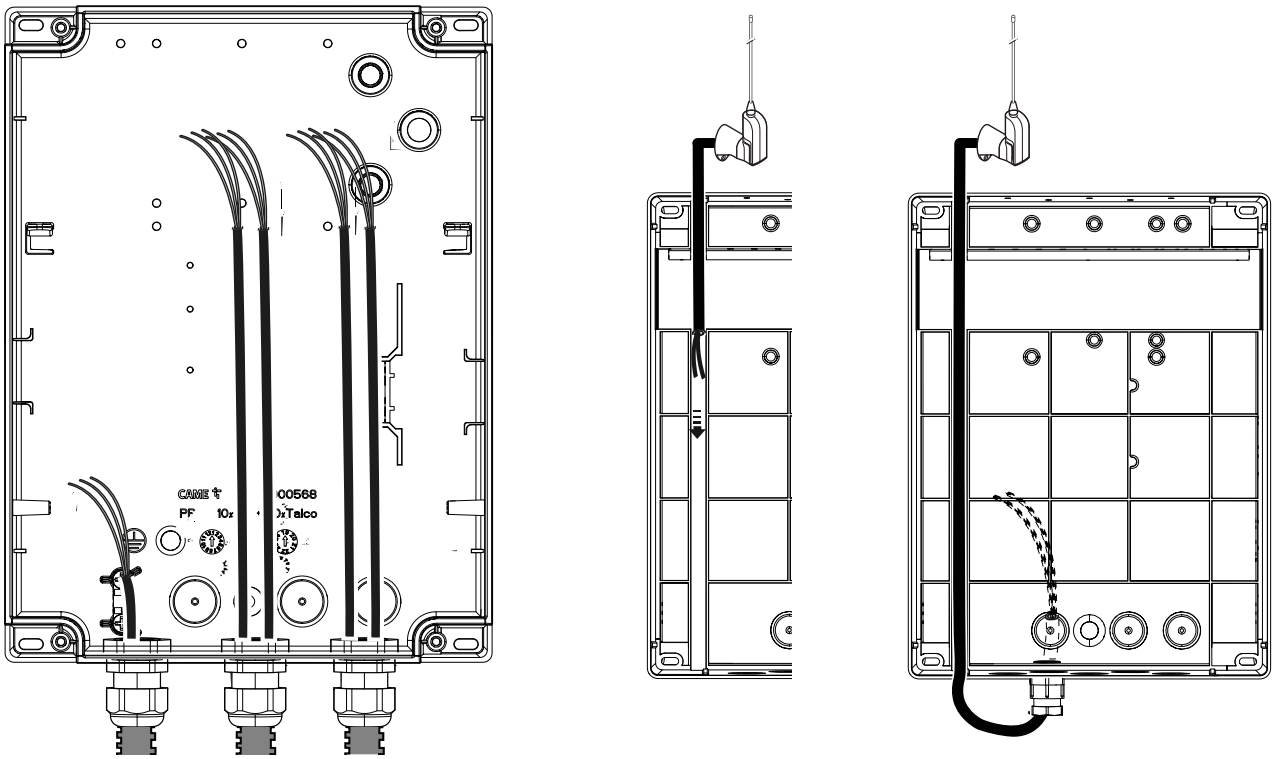

Fixing earth cable

Secure the supplied cable clamp with the screws provided. ㉑
With an eyelet (not supplied) connect the earth cable ⏚ with the earth star centre ⓴ on the box.
Connect the eyelet on the functional earth cable ㉓ and secure the eyelets using the knurled washer and screw provided. ㉒
Connect the functional earth cable ⏚ to the control board using the Faston. See section [Mains connections].

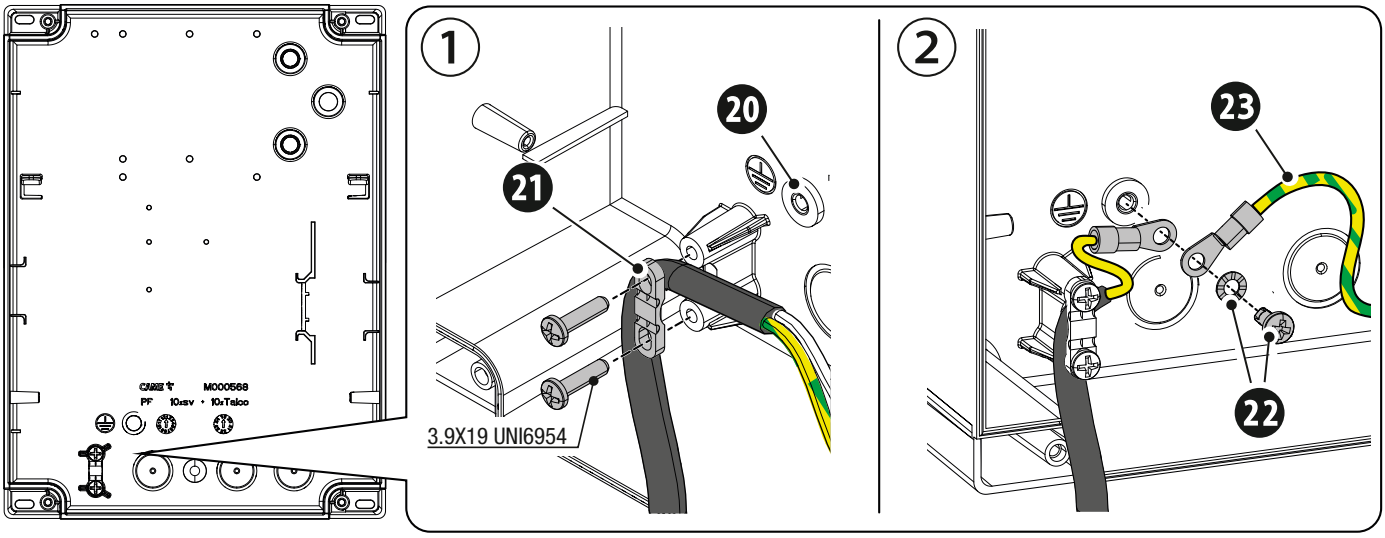

Electronic board fastening and support

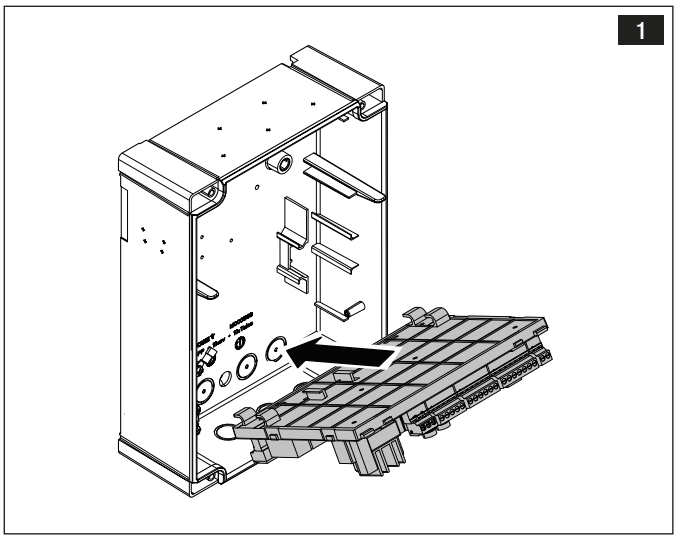

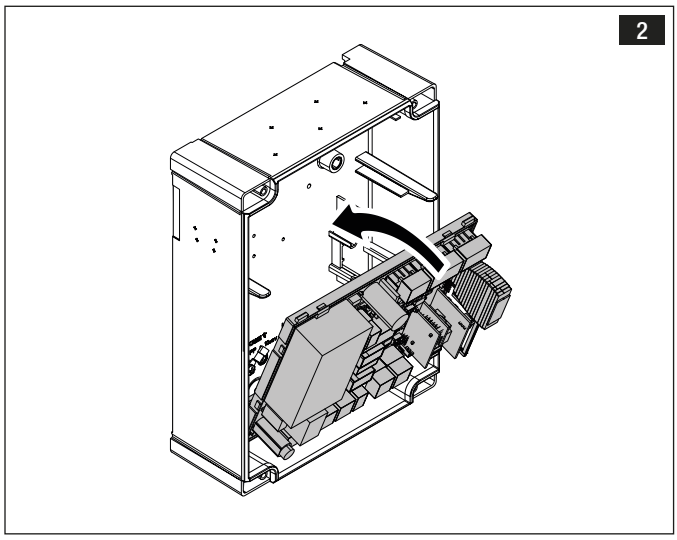

Mains connections

Power supply 230 V AC - 50/60 Hz

L - Phase **N** - Neutral **F** - Line fuse ⏚ - Functional earth cable ⏚ - Earth

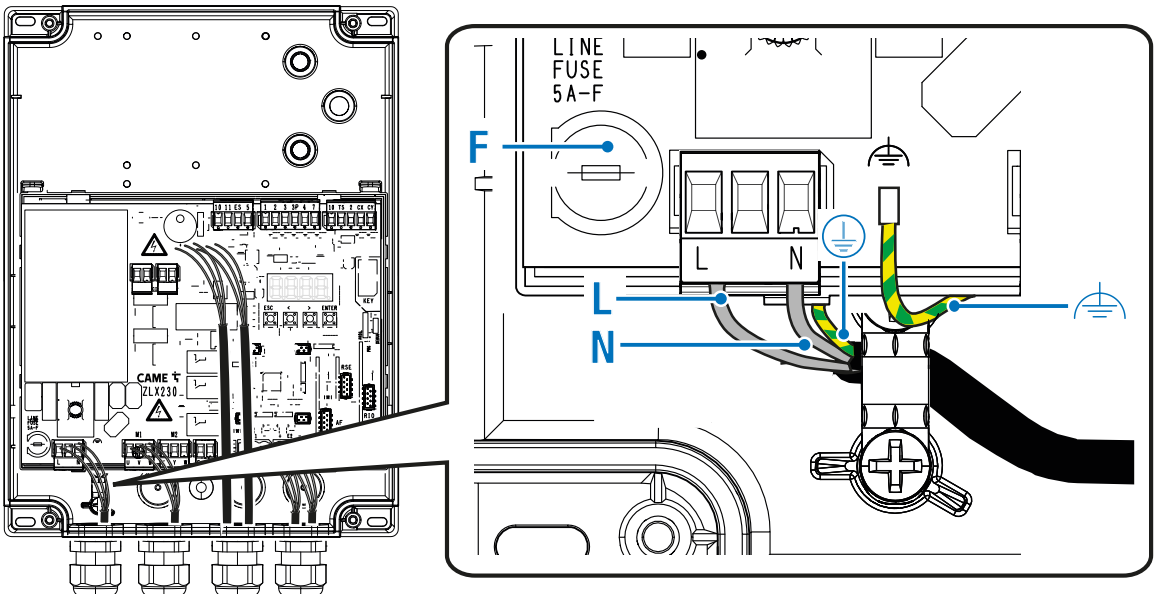

Connecting gearmotors for swing operators

M1 = Gearmotor delayed while opening

M2 = Gearmotor delayed while closing

📖 Where there is only one gearmotor in the system, make the electrical connections on the gearmotor (M2).

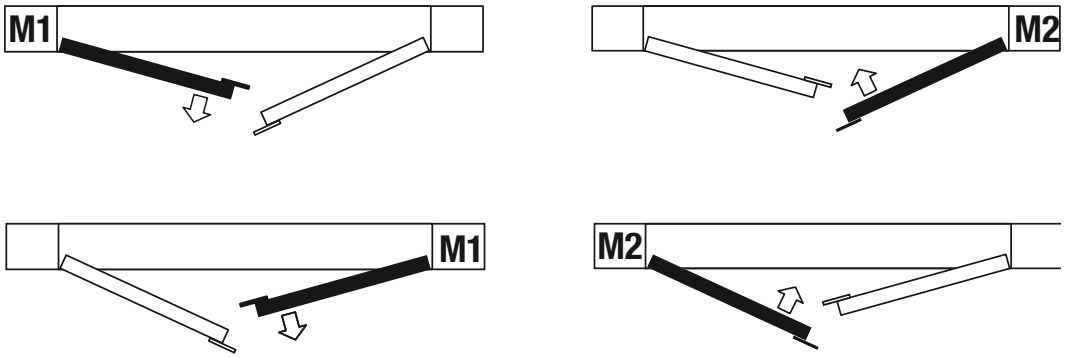

Gearmotors without encoder

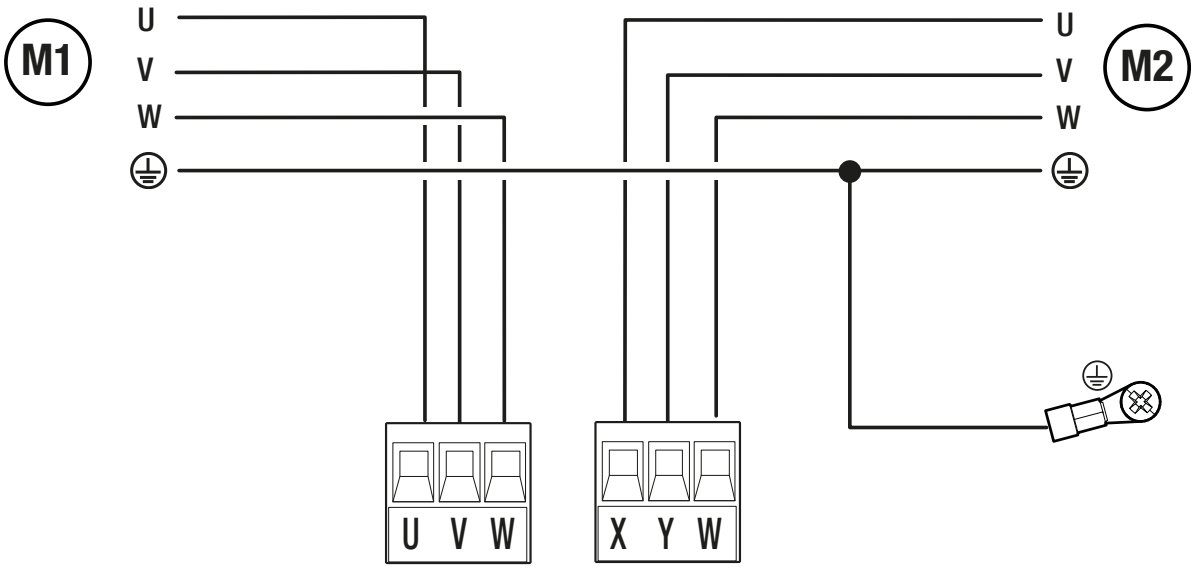

Gearmotor with encoder

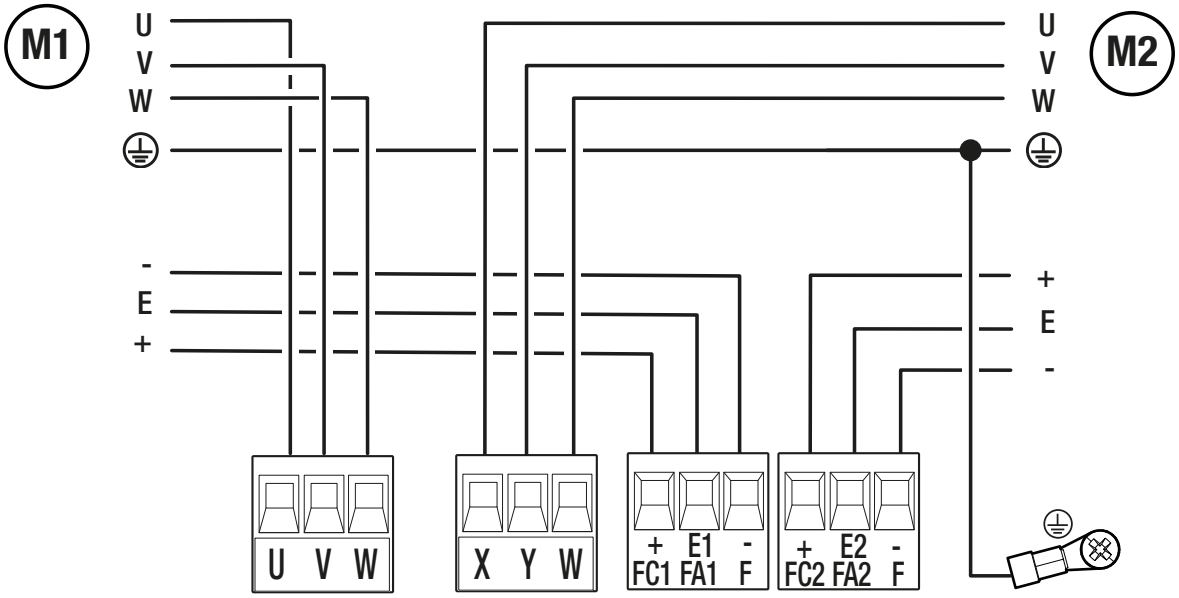

Gearmotors with limit switch

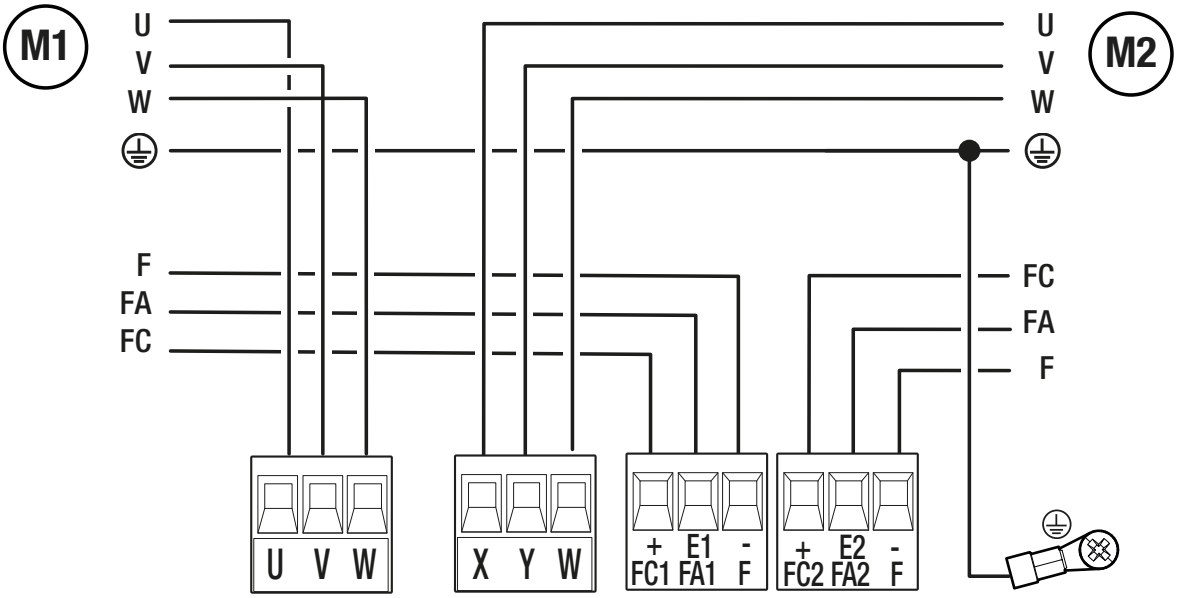

Capacitor connection

⚠ Do not connect capacitors if they are already present on the motor.

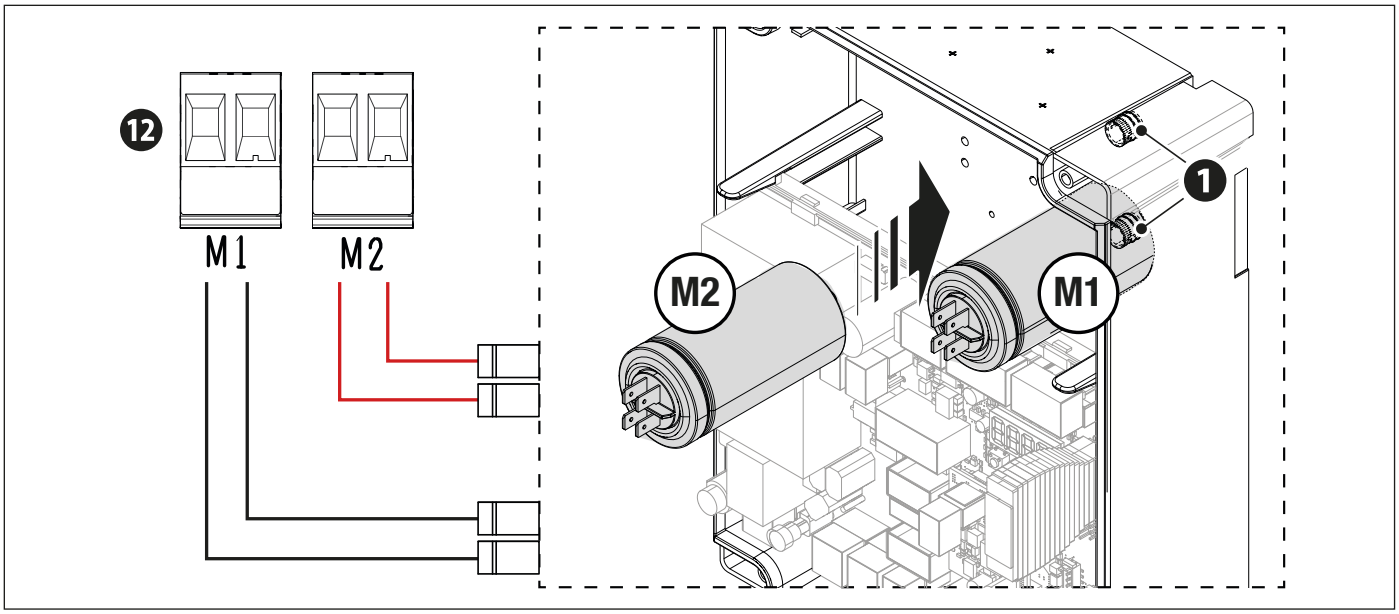

Power supply output for accessories 24 V

📖 All 24 V accessory outputs are in direct current (DC).

📖 The total power of the outputs listed below must not exceed the maximum output power [Accessories]

Device	Output	Power supply (V)	Maximum power (W)
Accessories	10 - 11	24 DC	20
Passage-open warning light	10 - 5	24 DC	3
Electric lock	10 - ES	12 DC	15
Electromagnet	10 - ES	24 DC	15

Power supply output for accessories 230 V

Device	Output	Power supply (V)	Frequency (Hz)	Maximum power (W)
Flashing beacon	E - W	230 AC	50/60	8*

(*) For incandescent or neon bulbs, the maximum power of the flashing beacon is 60 W.

CXN BUS connection

⚠ The output is set for CAME CXN BUS accessories only.

Device	Output	Power supply (V)	Maximum power (W)
BUS CXN	BUS	15 DC	15

Command and control devices

1
2

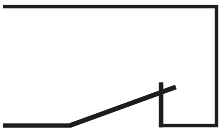

STOP button (NC contact)

📖 See the [F1 – Total stop] function.

2
3

Control device (NO contact)

Open command

📖 When the [F6 – Hold-to-run] function is active, a control device must be connected in OPEN.

2
3P

Control device (NO contact)

📖 With the encoder active, see function [F36 - Adjusting partial opening].

📖 With the encoder not active, see function [F71 - Partial opening time].

2
4

Control device (NO contact)

Close command

📖 When the function [F6 - Hold-to-run] is active, a control device must be connected in CLOSE.

2
7

Control device (NO contact)

Step-by-step command

Sequential command

📖 See function [F7 - 2-7 command].

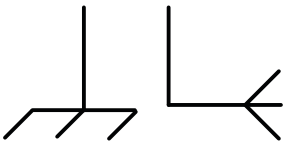

Antenna with RG58 cable

Use this terminal to connect the antenna.

Signalling devices

E
W

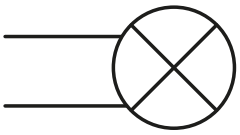

Flashing beacon or additional light

Depending on configuration, it flashes when the operator opens and closes, or increases lighting in the manoeuvre area.

📖 See function [F18 - Additional light].

10
5

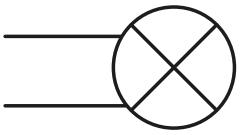

Operator status warning light (Passage-open warning light)

It notifies the user of the operator status.

📖 See function [F10 - Passage-open warning light].

Safety devices

Connect the devices to the CX and/or CY inputs.

During programming, configure the type of action that must be performed by the device connected to the input.

📖 If contacts CX and CY are used, they must be configured during programming.

📖 For systems with multiple pairs of photocells, please see the manual for the relevant accessory.

❶ **Standard connection**

❷ **Connection with safety test**

📖 See function [F5 – Safety devices test].

DIR photocells

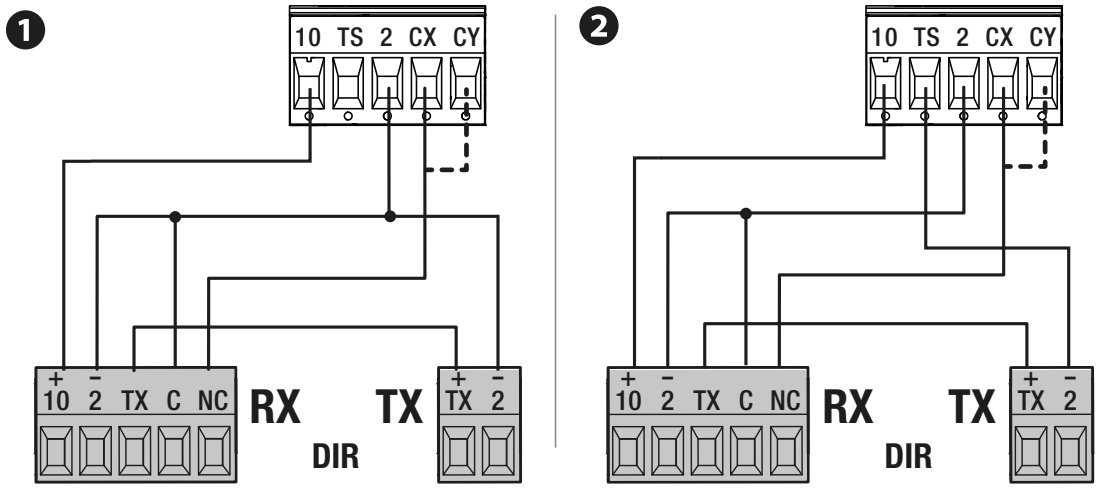

DXR / DLX photocells

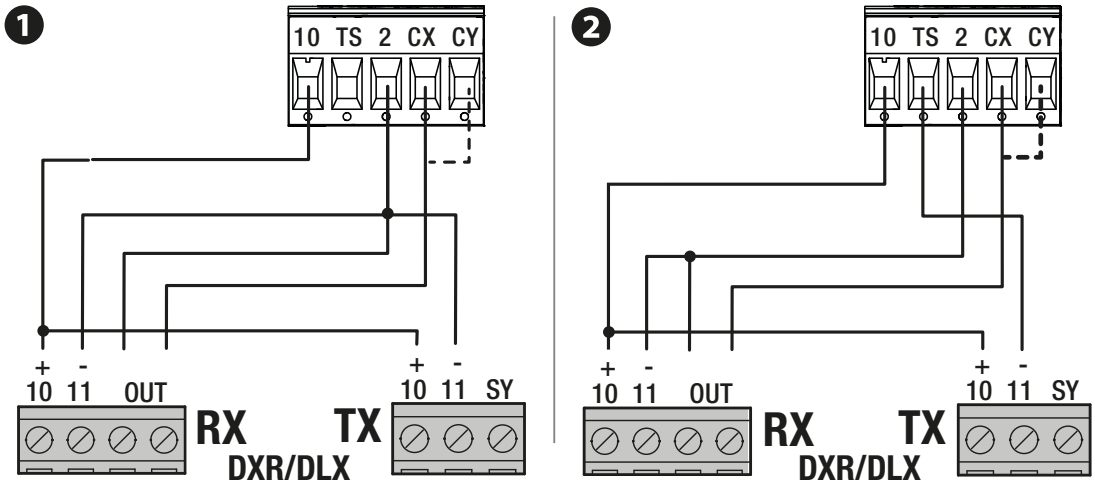

DFWN sensitive edge

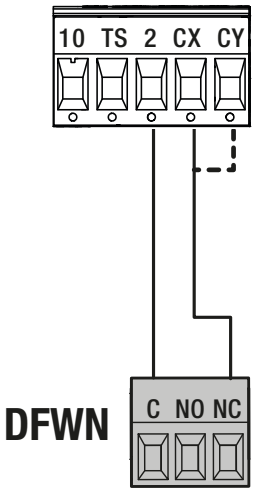

Electric lock or electromagnet

📖 See the [F17 - Lock] function.

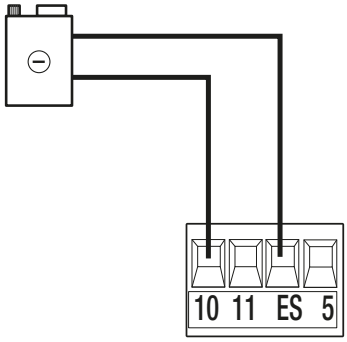

Connecting accessories with BUS CXN system

The CXN CAME system is a two-wire non-polarised communication BUS which allows you to connect up all compatible CAME devices. Connection to the BUS can be in a chain, star or mixed formation. Once the system has been wired, and after having set the address on each device, the function of each accessory can be configured on the control panel. This method allows you to configure the set-up immediately without having to work directly on the accessories and system wiring later. The CXN BUS can support control devices, interfaces, photocells, safety devices, beacons and gateways at the same time.

Cabling

❶ Chain connection
❷ Star connection
❸ Mixed connection

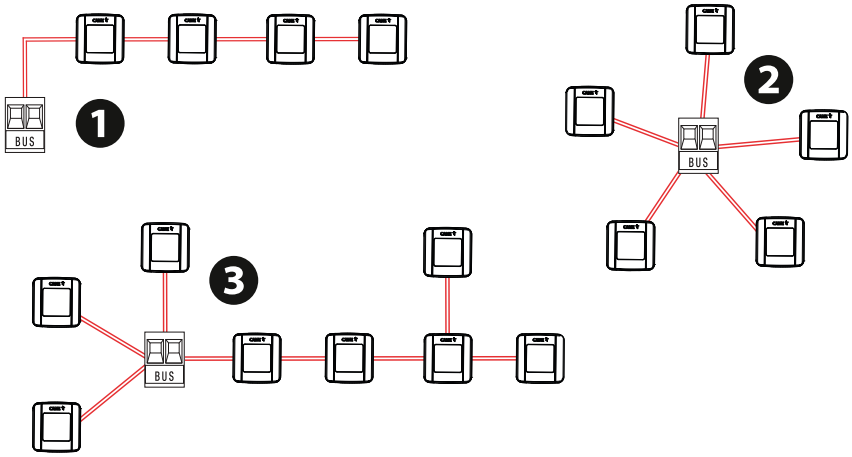

Cable types and minimum thicknesses

Branch length	0 to 15 m	15 to 50 m
KRX BUS flashing beacon (max. 1 per branch)	FROR 2 x 0.5 mm²	FROR 2 x 1 mm²
Branch load below 20 CXN	FROR 2 x 0.5 mm²	FROR 2 x 0.5 mm²
Branch load above 20 CXN	FROR 2 x 0.5 mm²	FROR 2 x 1 mm²

📖 Do not use a shielded cable.

⚠ The maximum length of a single branch is 50 metres. The sum of all branches must not exceed 150 metres.

Maximum number of devices that can be connected, by type

Type of device	Maximum number of devices per type
Selectors	8
Photocell pairs	8
Interfaces	2
Flashing beacons	2

BUS CXN device consumption

LINK

📖 BUS CXN device consumption is calculated in CXN units.

Scan the QR code to access an interactive table showing consumption data, and calculate the maximum number of BUS devices you can connect to the control panel.

Programming button functions and warning LEDs

📖 After one minute of inactivity, the display switches to standby mode. Press any key to reactivate it.

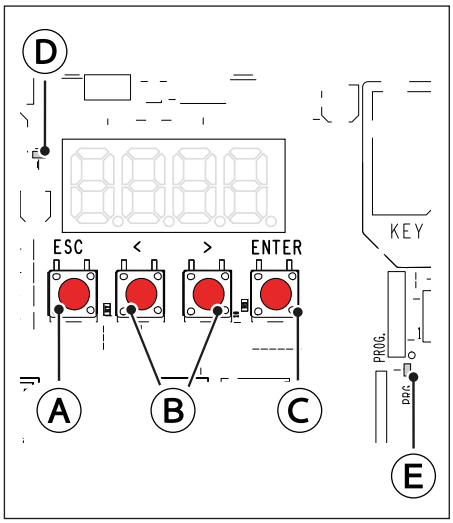

Ⓐ ESC button

The **ESC** button is used to perform the operations described below.
- Exit the menu
- Delete the changes
- Go back to the previous screen
- Stop the operator (outside the programming menu)

Ⓑ < > buttons

The <> buttons are used to perform the operations described below.
- Navigate the menu
- Increase or decrease values
- Operator opening and closing (outside the programming menu)
- > Open or close command (outside the programming menu)
- < Open or close command (outside the programming menu)

Ⓒ ENTER button

The **ENTER** button is used to perform the operations described below.
- Access menus
- Confirm a choice
- Display the motor opening/closing percentage

To display the motor opening percentage, press **ENTER** during a manoeuvre.

Press the key once to display the M1 opening/closing percentage (motor 1)

Press the key twice to display the M2 opening/closing percentage (motor 2)

Press the key three times to return to the main screen.

Ⓓ Power LED

The LED lights up when the board is powered up.

Ⓔ Programming LEDs

The LED flashes when the firmware is active and working on the board.

Getting started

⚠ **When using a CAME KEY device, always update the board firmware to the latest version.**

📖 Once the electrical connections have been made, proceed with commissioning. Only skilled and qualified staff may perform this operation.

Make sure that there are no obstacles in the way.

Power up the device and begin programming.

Start programming following the wizard shown on the display.

Gearmotor without encoder

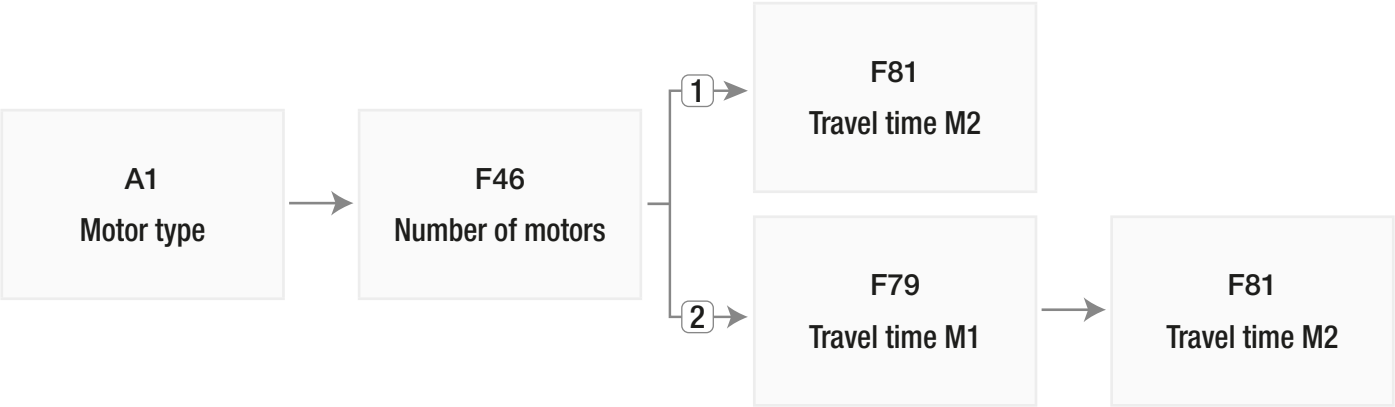

Gear motor with encoder

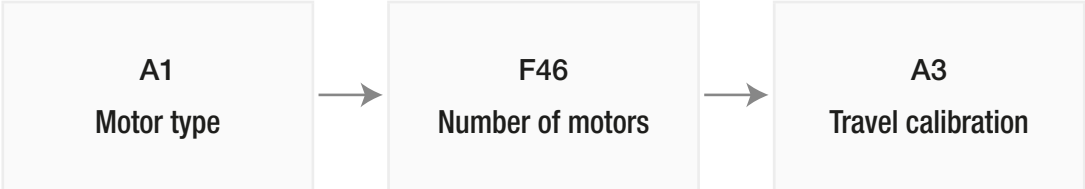

» Complete programming and check the warning, safety and protection devices, and the manual release, are working properly.
» Perform the first manoeuvre where you can see the gate in motion and with the photocells active, including where remotely controlled. The first manoeuvre is always to open the gate.
» Wait for the manoeuvre to be completed.

📖 Press the **ESC** button or **STOP** button immediately in the event of any faults, malfunctions, strange noises or vibrations, or unexpected behaviour in the system.

Diagrams showing leaf speed and slowdown (only for motors without an encoder or with an inactive encoder)

❶ Closing limit-switch
❷ Opening limit-switch

Ⓐ Maximum opening and closing speed time of M1 [Function F79]
Ⓑ Maximum opening and closing speed time of M2 [Function F81]
Ⓒ Opening and closing slow-down time of M1 and M2 [Function F84]
Ⓐ + Ⓒ = Stroke time in opening and closing M1
Ⓑ + Ⓒ = Opening and closing travel time of M2

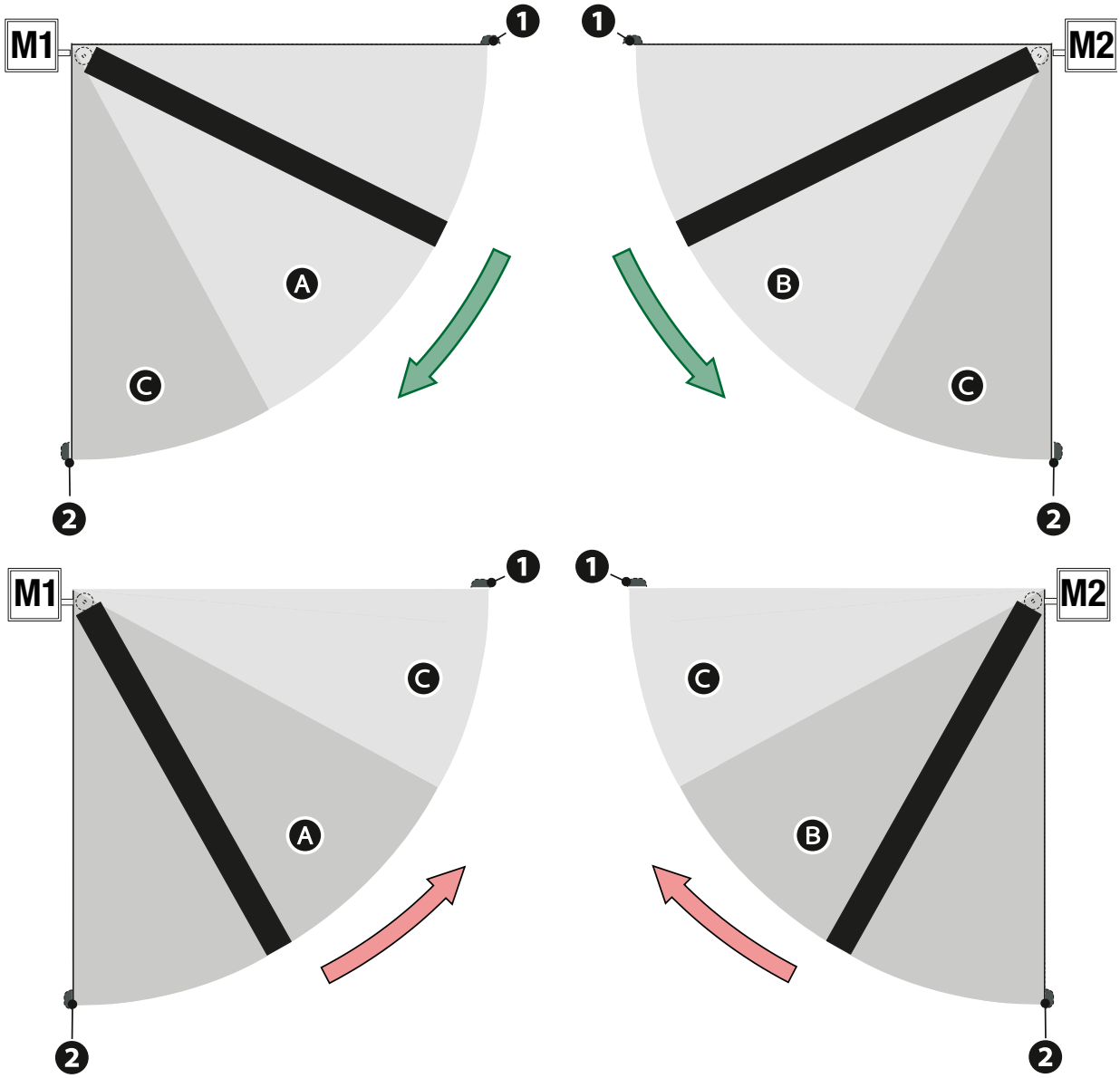

Diagrams showing leaf speed, slowdown and approach points

❶ Closing limit-switch
❷ Opening limit-switch
❸ Opening or closing slowdown point
❹ Opening or closing approach point

Ⓐ Opening or closing speed
Ⓑ Opening or closing slowdown speed
Ⓓ Stop-motion zone in case of obstructions
Ⓔ Invert-motion zone in case of obstructions

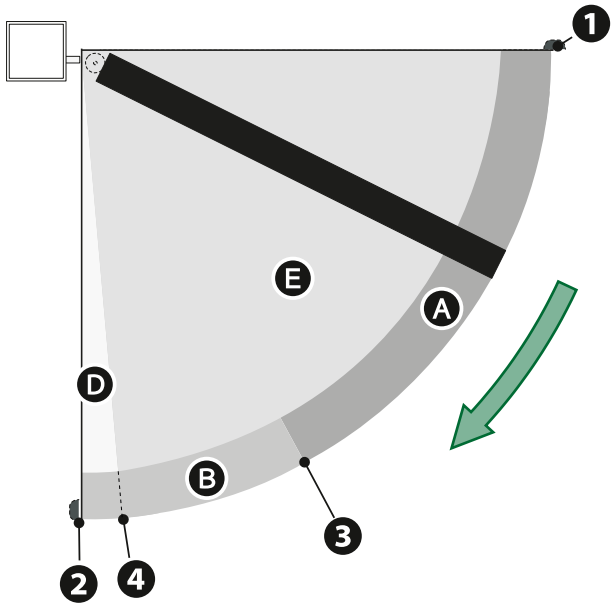

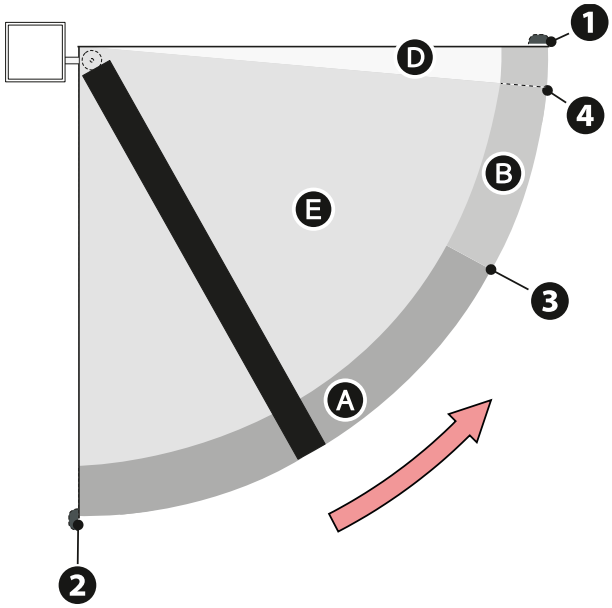

Graph showing speed curves during movement, slowdown and approach.

Using slowdown space (slowdown space > 0)

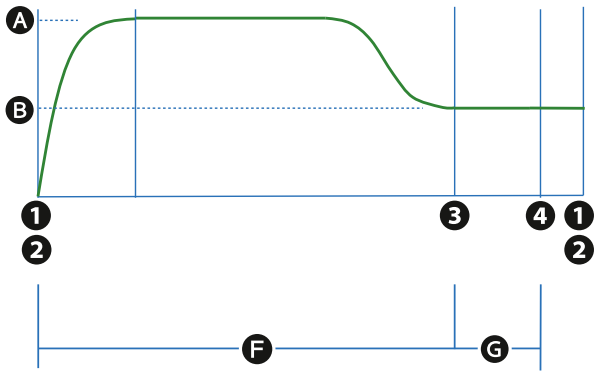

❶❷ Opening or closing limit-switch
❸ Opening or closing slowdown point
❹ Opening or closing approach point

Ⓐ Opening or closing speed
Ⓑ Opening or closing slowdown and approach speed

Ⓕ Obstruction travel sensitivity
Ⓖ Slowdown obstruction sensitivity

Without using slowdown space (slowdown space = 0)

Ⓐ Opening or closing speed
Ⓕ Obstruction travel sensitivity

❶❷ Opening or closing limit-switch
❹ Opening or closing approach point

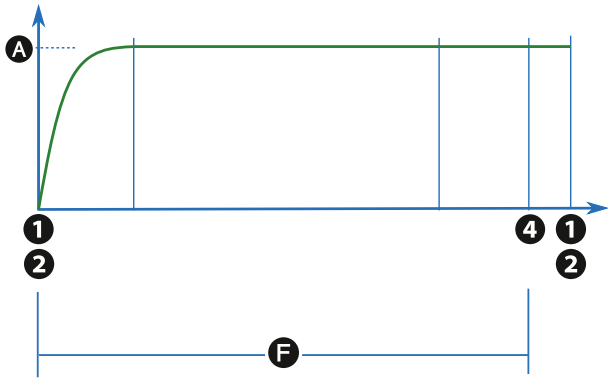

Functions menu

⚠ **When using a CAME KEY device, always update the board firmware to the latest version.**

🕮 Some functions may not be available with firmware versions prior to the latest one or without some accessory devices.

🕮 The functions relating to encoders and/or managing limit switches are only available for motors configured for this purpose.

Function		Parameters	Function description
F1	**Total stop**	OFF (Default) ON	The function is used to manage operator stops and exclusion of all other commands. When the function is activated, the 2-1 input is used as a normally closed contact. By activating a device (normally closed) connected to input 2-1, the operator stops and all commands are excluded, including any automatic closing. 🕮 **Use a control device to resume movement.**
F2 **F3**	**CX input** **CY input**	OFF (Default) C1 = Reopen while closing (photocells) C2 = Reclose while opening (photocells) C3 = Partial stop Only with [Automatic close] activated. C4 = Obstacle standby (photocells) C7 = Reopen while closing (sensitive edges) C8 = Reclose while opening (sensitive edges) C13 = Reopen while closing, with immediate closure once the obstruction has been removed, even if the gate is not in motion r7 = Reopen while closing (sensitive edges with 8K2 resistor) r8 = Reclose while opening (sensitive edges with 8K2 resistor) 2r7 = Reopen while closing (pair of sensitive edges with 8K2 resistor) 2r8 = Reclose while opening (pair of sensitive edges with 8K2 resistor)	The function is used to configure the CX (F2) and CY (F3) input.
F5	**Safety devices test**	OFF (Default) 1 = CX 2 = CY 3 = CX+CY	The function is used to check that the photocells connected to the selected inputs are operating correctly, after each opening and closing command. 🕮 **Run the test by connecting the photocells to the TS terminal [see paragraph Photocells and sensitive edges].**

F6	**Hold-to-run**	OFF (Default) ON	With the function active, the operator stops moving (opening or closing) when the control device is released. 📖 **When the function is active, it excludes all other control devices.**
F7	**Command 2-7**	0 = Step-by-step (default) - The first command is to open and the second to close. 1 = Sequential - The first command is to open, the second to STOP, the third to close and the fourth to STOP.	The function associates a command to the device connected on 2-7.
F9	**Obstacle with motor stopped**	OFF (Default) ON	With the function active and the operator stopped, an open or close command is not performed if the safety devices detect an obstacle. The function is active when the passage is closed or open, or after a complete stop.
F10	**Passage-open warning light**	0 = Warning light on (default) - The light stays on when the operator is moving or the passage is open. 1 = Warning light flashing - The warning light flashes every half a second when the passage is opening and stays on when the passage is open. The light flashes every second when the passage is closing, and remains off when the passage is closed.	The function is used to set the type of warning for the open passage light.
F11	**Encoder**	ON (Default) OFF	The function activates or deactivates the encoder. 📖 **The parameter is only available for motors that have an encoder.**
F13	**Closing thrust**	OFF (Default) 1 = Minimum thrust 2 = Medium thrust 3 = Maximum thrust	When the function is active, the leaves briefly exert a closing thrust.
F16	**Thrust**	OFF (Default) ON	When the function is active, before every manoeuvre, the leaves thrust inwards to release the electric lock. 📖 **The thrust motion is performed during opening or closing, depending on where the electric lock is active. See the [F17 - Lock] function.**

F17	**Lock**	OFF (Default) 1 = From closed 2 = From open 3 = From open and closed 4 = Continue 5 = Electromagnet 24 V 🕮 **The electromagnet activates when the motor is stationary and deactivates during a manoeuvre.**	This function allows you to choose the operating mode of the electric lock/electromagnet.
F18	**Additional light**	0 =Flashing beacon (Default) 1 = Cycle light - The lamp stays on during the manoeuvre. 🕮 **An automatic closing time must be set under [F19 – Automatic closing] to ensure correct operation.** 2 = Courtesy lamp - The light switches on when a manoeuvre starts and remains on once the manoeuvre has finished, for the time set under the function [F25 - Courtesy time].	This function allows you to choose the operating mode of the lighting device connected to the output E - W.
F19	**Automatic closure**	OFF (Default) From 1 to 180 seconds	The function is used to set the time before automatic closure, once the opening travel end point has been reached or once the photocells have caused a partial stop [C3]. 🕮 **The function does not work if any of the safety devices are triggered when an obstacle is detected, after a complete stop, during a power outage or if there is an error.**

F20	**Automatic closing after either partial or pedestrian opening**	OFF 1 to 180 seconds (Default 10)	The function is used to set the time before automatic closure after a partial or pedestrian opening command. **📖 The function does not work if any of the safety devices are triggered when an obstacle is detected, after a complete stop, during a power outage or if there is an error.** **Apartment building mode** **📖 The function is available only with the encoder active.** With the Partial/Pedestrian opening command (2-3P), leaf M2 opens. If an OPEN command is then sent, both leaves fully open. With the function [F19 - Automatic closing] set, leaf M1 closes after the selected automatic closing time, while leaf M2 moves to the partial opening point set under [F36 - Partial opening adjustment]. **📖 In apartment building mode, deactivate the [F20 – Automatic closing after partial or pedestrian opening] function.** **📖 To return to normal gate operation, send a closing command.**
F21	**Pre-flashing time**	OFF (Default) 1 to 10 seconds	The function adjusts the time for which the beacon is activated before each manoeuvre.
F23	**M1 opening delay time**	OFF 1 to 10 seconds (Default 2)	The function is used to adjust the delayed opening of the first leaf compared to the second.
F24	**M2 closing delay time**	OFF 1 to 25 seconds (Default 2)	The function is used to adjust the delayed closing of the second leaf compared to the first.
F25	**Courtesy light time**	60 to 180 seconds (Default 60)	The function allows you to set the seconds the additional light (set up as courtesy light) stays on after an opening or closing manoeuvre.
F30	**M1 leaf opening and closing slowdown speed**	**📖 The parameters vary according to the motor selected in the [A1 – Motor type] function.**	The function is used to set the opening and closing slowdown speed of M1. The percentage is calculated based on the maximum travel speed. **📖 The slowdown speed may vary according to the weight of the leaf and the mechanical characteristics of the system.**
F31	**M2 leaf opening and closing slowdown speed**	**📖 The parameters vary according to the motor selected in the [A1 – Motor type] function.**	The function is used to set the opening and closing slowdown speed of M2. The percentage is calculated based on the maximum travel speed. **📖 The slowdown speed may vary according to the weight of the leaf and the mechanical characteristics of the system.**

F34	**Travel sensitivity**	10% to 100% (Default 100%) 🕮 10% = minimum thrust and high obstruction sensitivity 🕮 100 % =maximum thrust and low obstruction sensitivity	The function adjusts the obstacle detection sensitivity during the gate travel in percentage terms. ⚠ Change the parameter in compliance with the regulations on impact force. 🕮 The parameter is only available for motors that have an encoder.
F35	**Slowdown sensitivity**	10% to 100% (Default 100%) 🕮 10% = minimum thrust and high obstruction sensitivity 🕮 100 % =maximum thrust and low obstruction sensitivity	The function adjusts the obstacle detection sensitivity during slowdown in percentage terms. ⚠ Change the parameter in compliance with the regulations on impact force. 🕮 The parameter is only used if the opening or closing slowdown point is active. 🕮 The parameter is only available for motors that have an encoder.
F36	**Adjusting the partial opening**	10% to 100% (Default 100%)	For single-leaf gates, the function is used to set the leaf partial opening percentage with respect to the total travel. For two-leaf gates, the function is used to set the partial opening percentage of the leaf M2 with respect to the total travel. 🕮 100% = Pedestrian opening 🕮 The parameter is only available for motors that have an encoder.
F37	**M1 opening slowdown space**	OFF 1% to 50% (Default 10%)	The function allows you to set the percentage of the total travel in which M1, after the slowdown point during opening, proceeds at a slowed constant speed. 🕮 The parameter is only available for motors that have an encoder.
F38	**M1 closing slowdown space**	OFF 1% to 50% (Default 10%)	The function allows you to set the percentage of the total travel in which M1, after the slowdown point during closing, proceeds at a slowed constant speed. 🕮 The parameter is only available for motors that have an encoder.
F39	**M1 opening approach space**	0.5% to 25.0% (Default 8.0%)	The function allows you to set the percentage of the total travel to be used for the opening approach of M1. 🕮 The parameter is only available for motors that have an encoder.
F40	**M1 closing approach space**	0.5% to 25.0% (Default 8.0%)	The function allows you to set the percentage of the total travel to be used for the closing approach of M1. 🕮 The parameter is only available for motors that have an encoder.

F41	**M2 opening slowdown space**	OFF 1% to 50% (Default 10%)	The function allows you to set the percentage of the total travel in which M2, after the slowdown point during opening, proceeds at a slowed constant speed. 🕮 **The parameter is only available for motors that have an encoder.**
F42	**M2 closing slowdown space**	OFF 1% to 50% (Default 10%)	The function allows you to set the percentage of the total travel in which M2, after the slowdown point during closing, proceeds at a slowed constant speed. 🕮 **The parameter is only available for motors that have an encoder.**
F43	**M2 opening approach space**	0.5% to 25.0% (Default 8.0%)	The function allows you to set the percentage of the total travel to be used for the opening approach of M2. 🕮 **The parameter is only available for motors that have an encoder.**
F44	**M2 closing approach space**	0.5% to 25.0% (Default 8.0%)	The function allows you to set the percentage of the total travel to be used for the closing approach of M2. 🕮 **The parameter is only available for motors that have an encoder.**
F46	**Number of motors**	2 (Default) 1	The function is used to set the number of motors controlling the gate. 🕮 **Value 1 indicates that the M2 motor is being used**
F49	**RSE communication**	3 = CRP/CAME KEY (Default) 6 = ModBus	The function is used to configure the card inserted in the RSE connector.
F56	**CRP address**	1 to 254 (Default 1)	The function assigns a unique identification code (CRP address) to the control board. 🕮 **The function is used where there are multiple operators connected to the same communication BUS using the CRP protocol.**
F57	**Dynamic automatic closing time**	OFF (Default) ON	When the function is active, the automatic closing time increases progressively with intensive use of the operator. This function stops the motor from overheating.
F58	**Configure maintenance**	OFF (Default) from 1 x100 to 500 x100	The function allows you to set the number of manoeuvres the operator can perform before a maintenance warning signal is generated. 🕮 **The warning is displayed as an [SEr] message and signalled by 3 + 3 flashes every hour on the device [Passage-open warning light].**

F63	**RSE speed**	2 = 4800 bps 3 = 9600 bps 4 = 14400 bps 5 = 19200 bps 6 = 38400 bps (default) 7 = 57600 bps 8 = 115200 bps	The function allows you to set the communication speed of the remote connection system.
F65 **F66**	**RIO ED T1** **RIO ED T2**	OFF (Default) P0 = It stops the gate and excludes automatic closing. Use a control device to resume movement. P7 = Reopen while closing. P8 = Reclose while opening.	The function is used to configure a wireless safety device. **📖 The function only appears if the RIO CONN interface board is present.**
F67 **F68**	**RIO PH T1** **RIO PH T2**	OFF (Default) P1 = Reopen while closing. P2 = Reclose while opening. P3 = Partial stop. Only with [Automatic close] activated. P4 = Obstacle standby. P13 = Reopening during closure with immediate stop once the obstacle has been removed, even with the gate not in motion.	The function is used to configure a wireless safety device. **📖 The function only appears if the RIO CONN interface board is present.**
F71	**Partial opening time**	OFF 1 to 30 seconds (Default 10)	The function allows you to adjust the partial opening time of the operator. **⚠ The partial opening time must not be longer than the opening and closing stroke time of M2. See function [F81 - Time of M2 opening and closing stroke].** **📖 The parameter is only available for motors that do not have an encoder or if the encoder is deactivated. See the [F11 - Encoder] function.**
F72	**Limit-switch function**	OFF = Deactivated 1 = Opening limit-switch and closing limit-switch 2 = Slowdown 3 = Opening limit-switch, closing slowdown	The function is used to configure the inputs for slowdown switches and/or limit switches. **📖 The type of input [F73 - FC/FA input type] can be modified with a generic motor only. In all other cases, use the type required for the specific motor.**
F73	**Input type FC/FA**	0 = N.O. (Default) 1 = N.C. 2 = N.C. for FA input, N.O. for FC input	The function allows you to configure the type of FC/FA inputs. **📖 The function appears only with generic motors [Function A1 set at 0].** **📖 The function only appears if the [F72 - Limit-switch function] is active.**
F74	**Type of motor arm**	Set the type of motor arm installed on M1 and M2.	Standard (Default) OFF 2 = 180° transmiss. kit (801XA-0040)

F79	**M1 opening and closing travel time**	5 to 180 seconds (Default 25)	The function is used to modify the M1 motor opening and closing travel time. 🕮 **The parameter is only available for motors that do not have an encoder or if the encoder is deactivated. See the [F11 - Encoder] function.**
F81	**M2 opening and closing travel time**	5 to 180 seconds (Default 25)	The function is used to modify the M2 motor opening and closing travel time. 🕮 **The parameter is only available for motors that do not have an encoder or if the encoder is deactivated. See the [F11 - Encoder] function.**
F83	**Removing obstacles**	OFF = Inversion caused by obstacle (Default) When an obstacle is detected, the operator inverts the direction of travel until the limit switch is reached. ON = Remove obstruction When an obstacle is detected, the operator inverts the direction of travel to create enough space to clear the obstacle and then comes to a stop.	The function allows you to activate the Remove obstruction mode where an obstacle is detected.
F84	**M1 and M2 opening and closing slowdown time**	OFF (Default) 1 to 30 seconds	The function is used to modify the opening and closing slowdown time for both motors. 🕮 **Add the slowdown time to the travel time.** 🕮 **The parameter is only available for motors that do not have an encoder or if the encoder is deactivated. See the [F11 - Encoder] function.**
U1	**New user**	The function is used to register up to a maximum of 250 users and assign a function to each one. 🕮 **The operation can be carried out by using a transmitter or a BUS selector device (e.g. a keypad or transponder reader). The board that manages the transmitters (AF) must be inserted into the connector.** 🕮 **See the [Saving a new user] section for information on the save procedure.**	
U2	**Remove user**	The function is used to remove one of the registered users. 🕮 **See the [Remove registered users] section for information on how to remove them.**	
U3	**Remove all**	OFF (Cancel operation) ON (Run operation)	The function is used to remove all registered users. 🕮 **"CLr" will appear to confirm deletion.**

U4	**Radio decoding**	1 = All decoding (default) 2 = Rolling code 3 = TW key block	The function is used to choose the type of radio coding for the transmitters enabled to control the operator. 📖 **If you choose [Rolling code] or [TW key block], any transmitters with a different type of radio coding saved previously will be deleted.**
U8	**Self-Learning Rolling**	OFF (Default) ON	The function is used to save a new rolling code transmitter by activating acquisition from a rolling code transmitter that has already been stored. The saving and acquisition procedures are explained in the transmitter manual.
A1	**Motor type**	0 = Generic (Default) 1 = FAST-70 2 = FAST-40 3 = F1000-F1100 4 = FERNI-40 5 = KRONO 6 = ATI-ATIx0AGS 7 = ATI30AGF 8 = ATI50AGF 9 = ATS 10 = AXO 11 = AX71230 12 = FROG-A 13 = FROG-AE 14 = F40230E	The function is used to set the type of gearmotor installed on M1 and M2.
A2	**Motor test**	The > button opens gate leaf M2 The < button opens gate leaf M1	The function is used to check the gate leaves open in the right direction. With the function active, the > key opens the gate leaf connected to M2, and the < key opens the gate leaf connected to M1. The movement continues while the key is pressed or until the end-of-travel limit switch is reached. When the key is released, the movement stops. 📖 **If the leaf does not move in the correct direction, invert the motor phases.**
A3	**Travel calibration**	OFF (Cancel operation) ON (Run operation)	The function is used to start travel self-learning. 📖 **The parameter is only available for motors that have an encoder.**
A4	**Parameter reset**	OFF (Cancel operation) ON (Run operation)	The function restores the factory configurations except for:[users], [password], [motor type], [number of motors], [CRP address], [limit switch input function], and the travel calibration settings.

A5	**Manoeuvre counter**	Tot = total manoeuvres - Manoeuvres performed since the operator was installed. Par = partial manoeuvres - Manoeuvres carried out after the last maintenance. **📖 Under the [Par] parameter, press the ENTER key to reset the number of partial manoeuvres. [Clr] will appear on the screen to confirm deletion.**	The function allows you to view the number of total or partial operator manoeuvres (after maintenance). **📖 The control panel regularly saves the number of manoeuvres automatically. In the event of an unexpected power outage, the number of manoeuvres last saved is restored.** **📖 The number of manoeuvres is the number shown multiplied by 100.**
A8	**Engine power - DTC (Digital Torque Control)**	10% to 100% (Default 100%)	The function allows you to increase or decrease the maximum thrust of motors connected on M1 and M2 during a manoeuvre.
H1	**FW version**	The function is used to display the firmware version.	
H3	**Enable password**	OFF (Default) ON	Set a 4-digit password. The password will be requested to anyone who wants to access the main menu. Use the arrows and the Enter button to dial the desired code.
H4	**BUS device status**	**b = BUS photocells** b(1 - 8).<x> **d = BUS selector** d(1 - 8).<x> **L = BUS flashing beacon** L1/L2.<x> **i = I/O BUS module** i1/i2.<x>	The function shows the status of all devices that can be connected to the BUS and managed by the firmware in use. **Device status <x>** ll = Conflicting address o = Working c = Working with alarm signal F = Device fault - = No communication or not present

BUS (b1-b8) photocell functions

b1 **b2** **b3** **b4** **b5** **b6** **b7** **b8**	**BUS Photocell 1** **Photocell BUS 2** **Photocell BUS 3** **Photocell BUS 4** **Photocell BUS 5** **Photocell BUS 6** **Photocell BUS 7** **Photocell BUS 8**	OFF (Default) C1 = Reopen while closing (photocells) C2 = Reclose while opening (photocells) C3 = Partial stop Only with [Automatic close] activated. C4 = Obstacle standby (photocells) C13 = Reopen while closing, with immediate closure once the obstruction has been removed, even if the gate is not in motion C23 = Open command C24 = Close command	The function is used to configure the BUS photocell input. **📖 The function only appears if there is a BUS photocell connected.**

I/O BUS 1 (b11) module / I/O BUS 2 (b12) module functions*

(*) As set on the device DIP switch.

Path: **b11 / b12** > **i1**

i1	**input I1**	OFF (Default) C0 = This stops the operator and excludes automatic closing. Use a control device to resume movement. 🕮 **If it is activated, the input is used as a normally closed contact.** r7 = Reopen while closing (sensitive edge with 8K2 resistor). r8 = Reclose while opening (sensitive edge with 8K2 resistor). C22 = Partial opening C23 = Open C24 = Close C27 = Step-by-step - The first command is to open and the second to close. C28 = Sequential - The first command is to open, the second to STOP, the third to close and the fourth to STOP.	The function allows you to configure the inputs on the I/O modules. 🕮 **The function only appears if there is a BUS I/O module connected.**

Path: **b11 / b12** > **i2**

i2	**input I2**	OFF (Default) C0 = This stops the operator and excludes automatic closing. Use a control device to resume movement. 🕮 **If it is activated, the input is used as a normally closed contact.** r7 = Reopen while closing (sensitive edge with 8K2 resistor). r8 = Reclose while opening (sensitive edge with 8K2 resistor). C22 = Partial opening C23 = Open C24 = Close C27 = Step-by-step - The first command is to open and the second to close. C28 = Sequential - The first command is to open, the second to STOP, the third to close and the fourth to STOP.	The function allows you to configure the inputs on the I/O modules. 🕮 **The function only appears if there is a BUS I/O module connected.**

Path: **b11 / b12** > **o1**

o1	**Light output**	0 = Passage-open warning light - It notifies the user of the operator status [F10 - Passage-open warn. light]. 1 = Cycle light - The lamp stays on during the manoeuvre. 2 = Courtesy light - The light switches on when a manoeuvre starts and remains on once the manoeuvre has finished, for the time set under the function [F25 - Courtesy time].	This function allows you to configure output 1 on the I/O modules. 📖 **The function only appears if there is a BUS I/O module connected.**
Path: **b11 / b12** > **o2**			
o2	**Relay output**	0 = Bistable ON - 1 to 180 seconds (Default 1)	This function allows you to configure output 2 on the I/O modules. 📖 **The function only appears if there is a BUS I/O module connected.**

BUS (b21-b28) key selector switch functions

b21 **b22** **b23** **b24** **b25** **b26** **b27** **b28**	**BUS 1 key selector** **BUS 2 key selector** **BUS 3 key selector** **BUS 4 key selector** **BUS 5 key selector** **BUS 6 key selector** **BUS 7 key selector** **BUS 8 key selector switch**	0 = Step-by-step - The first command is to open and the second to close. 1 = Sequential - The first command is to open, the second to STOP, the third to close and the fourth to STOP. 2 = Open 3 = Close 4 = Partial opening 5 = Stop 7 = BUS 1 module relay - Activate output 2 (relay output) on BUS 1 I/O module 8 = BUS 2 module relay - Activate output 2 (relay output) on BUS 2 I/O module	The function allows you to configure the BUS key selector input. Different configurations can be set according to the key turning direction. rIG = Key to the right LEF = Key to the left 📖 **The function only appears if there is a BUS key selector connected.**

BUS (b40) flashing beacon functions

Path: **b40** > **L1**			
L1	**Automatic closing time colour**	OFF 1 = White 2 = Yellow 3 = Orange 4 = Red 5 = Purple 6 = Blue 7 = Light blue 8 = Green (Default)	The function allows you to set the BUS flashing beacon colour during the automatic closing time. 📖 **The function only appears if there is a BUS flashing beacon connected.**

Path: **b40** > **L2**			
L2	**Opening colour**	1 = White 2 = Yellow 3 = Orange 4 = Red (Default) 5 = Purple 6 = Blue 7 = Light blue 8 = Green	Set the BUS flashing beacon colour during operator opening. 📖 **The function only appears if there is a BUS flashing beacon connected.**
Path: **b40** > **L3**			
L3	**Closing colour**	1 = White 2 = Yellow 3 = Orange 4 = Red (Default) 5 = Purple 6 = Blue 7 = Light blue 8 = Green	This function allows you to set the colour of the BUS flashing beacon during operator closing. 📖 **The function only appears if there is a BUS flashing beacon connected.**
Path: **b40** > **L4**			
L4	**Pre-flashing colour**	1 = White (Default) 2 = Yellow 3 = Orange 4 = Red 5 = Purple 6 = Blue 7 = Light blue 8 = Green	The function allows you to set the flash colour for before opening and closing manoeuvres (pre-flash). 📖 **The function only appears if there is a BUS flashing beacon connected.**
Path: **b40** > **L5**			
L5	**Signal error**	OFF (Default) 1 = White 2 = Yellow 3 = Orange 4 = Red 5 = Purple 6 = Blue 7 = Light blue 8 = Green	The function allows you to set the colour of the BUS flashing beacon in the event of an error signal. 📖 **The warning light is activated after sending a command for movement.** 📖 **The function only appears if there is a BUS flashing beacon connected.**
b43	**Signal maintenance**	OFF (Default) 1 = White 2 = Yellow 3 = Orange 4 = Red 5 = Purple 6 = Blue 7 = Light blue 8 = Green	The function allows you to set the colour of the flash on enabled BUS devices (flashing beacons and selectors) when maintenance is necessary. With the function activated, these devices will signal that maintenance needs to be carried out at the start of each manoeuvre. 📖 **Configure maintenance and set the number of manoeuvres. See the function [F58 – Configure maintenance].** 📖 **The function only appears if there is a BUS flashing beacon or a BUS selector connected.**

Saving a new user

Press **ENTER** to enter programming.

① Access: **U1** - New user. Press **ENTER** to confirm.

② Choose the function to be assigned to the user:

1 = Step-by-step - The first command is to open and the second to close.
2 = Sequential - The first command is to open, the second to STOP, the third to close and the fourth to STOP.
3 = Open
4 = Pedestrian/partial opening
6 = BUS 1 module relay - Activate output 2 (relay output) on BUS 1 I/O module
7 = BUS 2 module relay - Activate output 2 (relay output) on BUS 2 I/O module

Press ENTER to confirm.

③ The first available position for storing will appear on the screen.

📖 **The available positions are the ones with flashing numbers.**

④ Within 10 seconds, send the code from the selector (transponder or keypad) or the transmitter key. [Sto] will appear to show acquisition has been successful.

📖 **The board that manages the control devices (AF) must be inserted into the connector.**

Repeat the procedure to add other users.

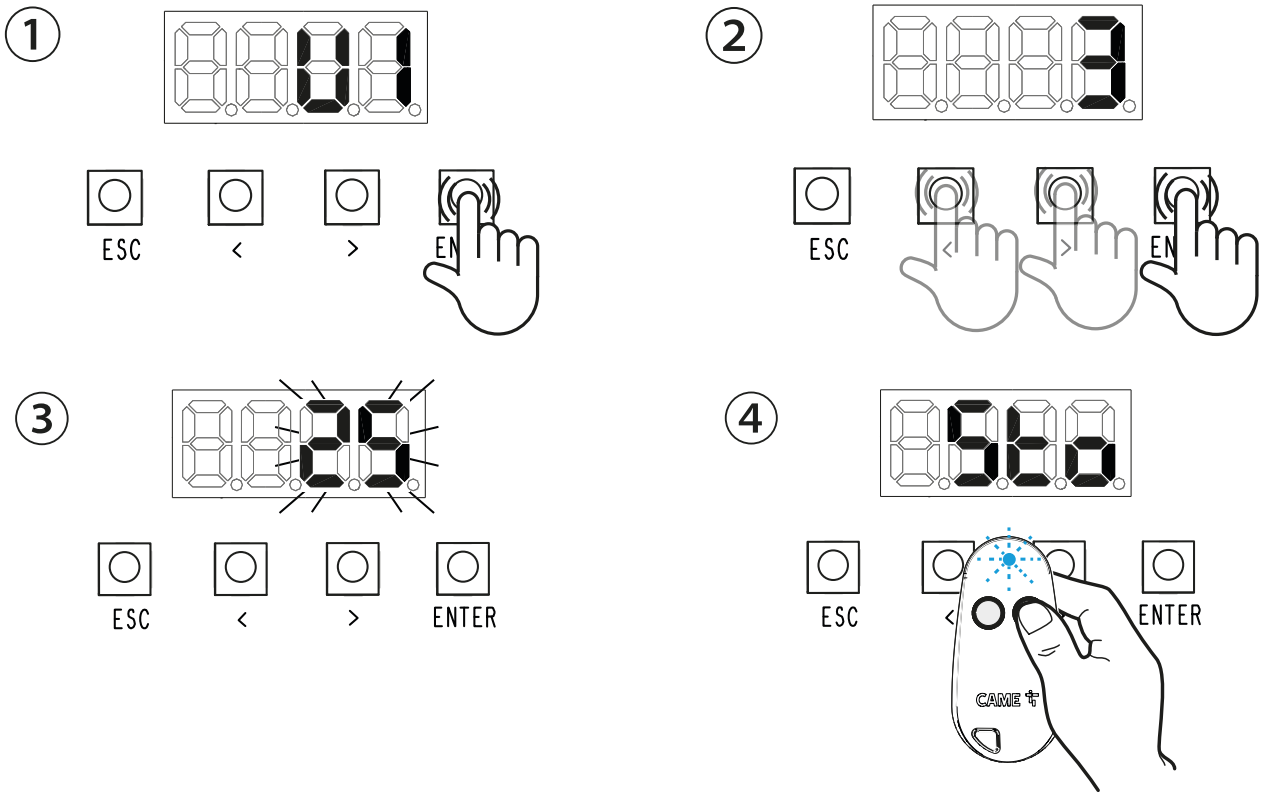

Removing registered users

Press **ENTER** to enter programming.

① Select: **U2** - Remove single user. Press **ENTER** to confirm.

② Use the arrows to select **ON** and press **ENTER** to start the remove user procedure.

③ Use the arrows to choose the number associated with the user you want to remove and press **ENTER** to confirm.

📖 Alternatively, the control device associated with the user you want to remove can be activated.

④ "CLr" will appear to confirm deletion.

Repeat the procedure to remove other users.

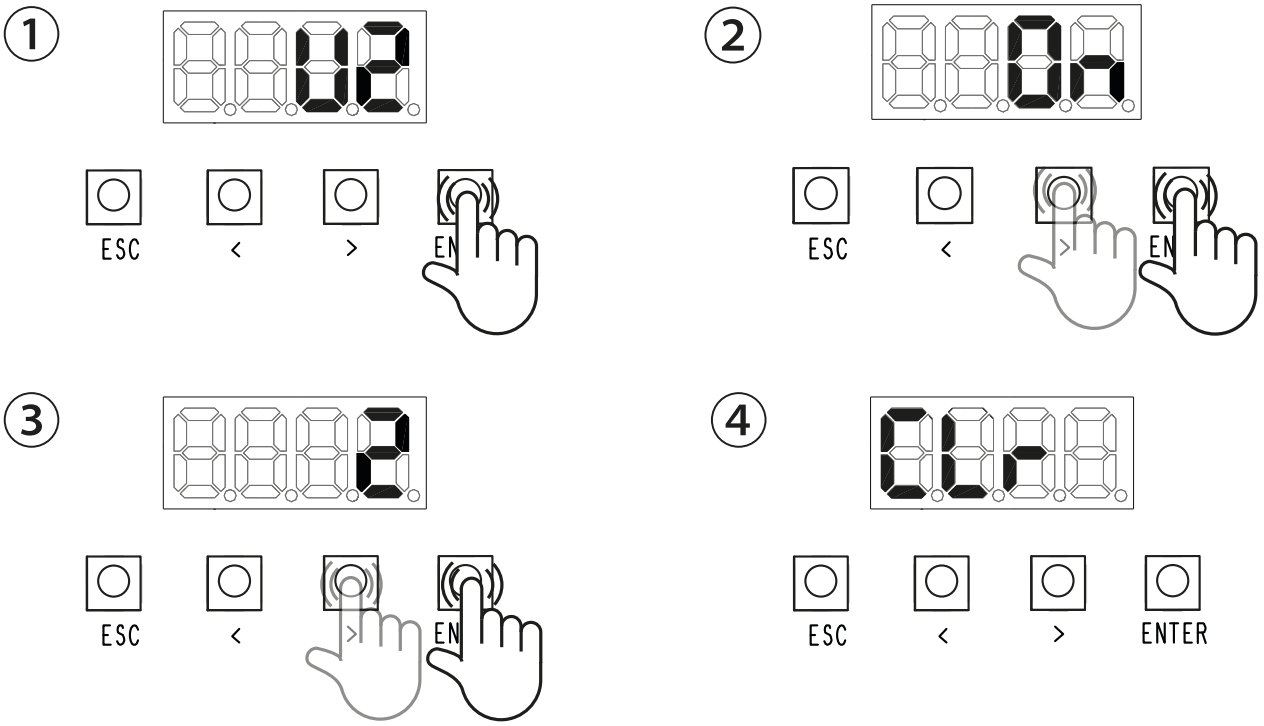

Forgotten password

If you lose the password, you will need to reset the board to its factory settings. See [Factory reset].

Factory reset

To restore the electronic board data to factory settings:
Disconnect the control board from the power supply and wait for it to switch off.
Press and hold the < and > buttons, then reconnect the control board to the power supply.
Continue to press and hold the < > buttons until [ON/OFF] is displayed.
Select [ON].
Press ENTER to confirm.

📖 When you reset the control board, all saved users and calibration operations are deleted.

DISPLAY WARNINGS KEY

C<n>	Wired safety device active 📖 The <n> value is associated with the selected parameter for the functions [F2 - CX input] [F3 - CY input].
r7	R7 safety device (sensitive edge) active
r8	R8 safety device (sensitive edge) active
2r7	R7 safety device (pair of sensitive edges) active
2r8	R8 safety device (pair of sensitive edges) active
c<n>	BUS photocell safety device active 📖 The <n> value is associated with the selected parameter for the [BUS photocell] functions.
c23	Open command active for BUS photocells
c24	Close command active for BUS photocells
C0	Total stop active
P<n>	RIO safety device active 📖 The <n> value is associated with the selected parameter for the functions [RIO ED T1 - RIO ED T2] and [RIO PH T1 - RIO PH T2]
A3 (scrolling)	Calibrate the travel
A1	Select a motor type
SEr	Maintenance required
OP.	Passage fully open
CL.	Passage fully closed

Error messages

E1	Calibration error
E2	Calibration error
E3	Encoder signal not detected error
E4	Safety device test error (see function F5)
E7	Operating time error
E9	Consecutive obstacles detected during closing
E10	Consecutive obstacles detected during opening
E11	The maximum number of obstacles detected consecutively has been exceeded
E15	Incompatible transmitter error
E17	Wireless system (RIO) communication error
E18	Wireless system (RIO) not configured error
E24	Communication error or malfunction of a BUS safety device **During a manoeuvre:** communication error or malfunction of a BUS safety device
E25	Conflicting addresses for configured BUS devices
E30	Board not working

SHORT CIRCUIT CHECK PROCEDURE

In the event of a short circuit on the 24V accessories, the power supply does not supply 24 V and the LEDs remain on. The display shows error E28.

To check for short circuits:
» Check there are no other reasons for the board power supply being interrupted;
» Disconnect the 10-11 output;
» Disconnect the 10-2 output;
» Remove any inserted cards (RSE, RIO, AF);
If the board switches back on correctly, a short circuit may have occurred on the 24V accessories.

FINAL OPERATIONS

📖 Before closing up the casing, check that the cable inlets are sealed to stop insects getting in and to prevent damp.

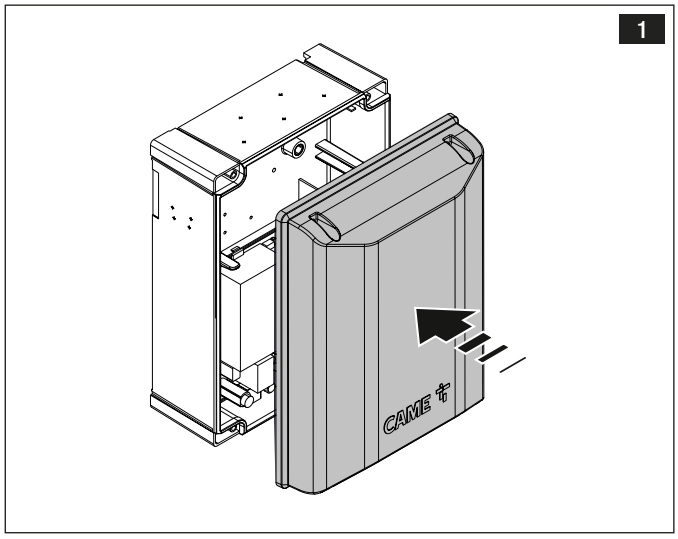

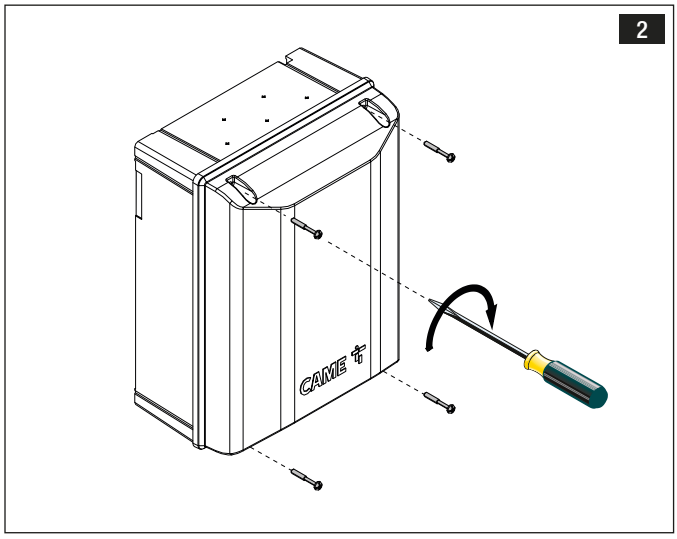

AFFIX THE PRODUCT LABEL
FROM THE BOX HERE

CAME

CAME.COM

CAME S.P.A.
Via Martiri della Libertà, 15
31030 Dosson di Casier
Treviso - Italy
Tel. (+39) 0422 4940
Fax (+39) 0422 4941
info@came.com - www.came.com